METRIC
MIL-PRF-89040A
8 May 1996
SUPERSEDING
MIL-PRF-89040
8 May 1995

PERFORMANCE SPECIFICATION
VECTOR PRODUCT INTERIM TERRAIN DATA (VITD)

This specification is approved for use by all Departments and Agencies of the Department of Defense.

1. SCOPE

1.1 Scope. This specification defines the content and format requirements of the Defense Mapping Agency's (DMA) Interim Terrain Data (ITD) product in the Vector Product Format (VPF). This product will replace the current ITD for users requiring this data on Compact Disc - Read Only Memory (CD-ROM). The data base from which VITD is produced is referred to as the Terrain Analysis Data Set (TADS).

1.2 Purpose. The purpose of this specification is to assure uniformity of treatment among all mapping and charting elements engaged in a coordinated production program for this product. VITD is a vector-based digital product that portrays selected military geographic information containing features of tactical military significance in a standardized georelational structure. VITD is designed to support tactical military and Geographic Information System (GIS) applications for selected geographic areas.

1.3 Classification. The VITD is primarily based on the feature content of the ITD (MIL-I-89014) produced by DMA. In turn, the ITD is based on the content and feature definitions contained

Beneficial comments (recommendations, additions, deletions) and any pertinent data which may be of use in improving this document should be addressed to: Director, Defense Mapping Agency, ATTN: ATC, ST A-13, 8613 Lee Highway, Fairfax, VA 22031-2137, by using the Standardization Document Improvement Proposal (DD Form 1426) appearing at the end of this document or by letter.

AMSC N/A **AREA MCGT**

DISTRIBUTION STATEMENT A. Approved for public release; distribution is unlimited.

in DMA's Tactical Terrain Analysis Data Base (TTADB) (MIL-T-89304). Sources used in the compilation of this product may include information derived from aerial photography, topographic maps, soil surveys, hydrographic studies, land use inventories, and transportation reports. Information may have been derived from hardcopy TTADBs at a scale of 1:50,000 or conversion from ITD in Standard Linear Format (SLF). VITD, ITD, and TTADB are all individually organized into single subject thematic overlays, files, or layers/coverages consisting of Surface Configuration (Slope), Vegetation, Surface Materials (Soils), Surface Drainage, Transportation (ITD and VITD have enhanced road networks), and Obstacles. Thus, VITD feature and attribute content is consistent with associated hardcopy TTADB products. These products cover only selected areas of the world.

2. APPLICABLE DOCUMENTS

2.1 General. The documents listed in this section are specified in sections 3 and 4 of this specification. This section does not include documents cited in other sections of this specification or recommended for additional information or as examples. While every effort has been made to ensure the completeness of this list, document users are cautioned that they must meet all specified requirements documents cited in sections 3 and 4 of this specification, whether or not they are listed.

2.2 Government documents.

2.2.1 Specifications, standards, and handbooks. The following specifications, standards, and handbooks form a part of this document to the extent specified herein. Unless otherwise specified, the issues of these documents are those listed in the current Department of Defense Index of Specifications and Standards (DoDISS) and the supplement thereto, cited in the solicitation (see 6.2).

SPECIFICATIONS

DEPARTMENT OF DEFENSE

MIL-I-89014	-	Interim Terrain Data (ITD)/ Planning Interim Terrain Data (PITD)
MIL-T-89304	-	Tactical Terrain Analysis Data Base (TTADB) Scale 1:50,000

STANDARDS

FEDERAL INFORMATION PROCESSING STANDARDS

FIPS PUB 10-3 - Countries, Dependencies, Areas of Special Sovereignty, and their Principal Administrative Division

(Copies of Federal Information Processing Standards (FIPS) are available to Department of Defense activities from the Standardization Documents Order Desk,, 700 Robbins Avenue, Building. 4D Philadelphia, PA 19111-5094. Others must request copies of FIPS from the National Technical Information Services, 5285 Port Royal Road, Springfield, VA 22161-2171.).

DEPARTMENT OF DEFENSE

MIL-STD-2407 - Vector Product Format

MIL-STD-2414 - Standard Practice Bar Coding for Mapping, Charting, & Geodesy Products

HANDBOOKS

DEPARTMENT OF DEFENSE

MIL-HDBK-9660 - DoD Produced CD-ROM Products

(Unless otherwise indicated, copies of the above specifications, standards, and handbooks are available from the Standardization Documents Order Desk, Building. 4D, 700 Robbins Avenue, Philadelphia, PA 19111-5094).

2.2.2 Other Government documents, drawings, and publications. The following other Government documents, drawings, and publications form a part of this document to the extent specified herein. Unless otherwise specified, the issues are those cited in the solicitation.

a. DMA Technical Manual (DMA TM) 8358.1 - Datums, Ellipsoids, Grids, and Grid Reference Systems. (Stock Number DMATM83581TEXT)

b. DMA Technical Report (DMA TR) 8350.2 - Department of Defense World Geodetic Systems, 1984. (Stock Number DMATR83502WGS84)

(Copies of a. and b. above are available from the Defense Mapping Agency, Consumer Interface (OCI), 6001 MacAuthur Boulevard, Bethesda, MD 20816-5001.)

c. Digital Geographic Information Exchange Standard (DIGEST), Part 4, Feature and Attribute Coding Catalogue (FACC).

d. DMA Procedural Instruction (PI) 813-102, Guidelines for Labeling The Defense Mapping Agency's CD-ROMs, and Printing and Finishing of Jewel Case Liners/Cardboard Sleeves, and Information Booklet.

(Application for copies of c. and d. should be addressed to: Director, Defense Mapping Agency, ATTN: ATI, 8613 Lee Highway, Fairfax, VA 22031-2137.)

2.3 Non-Government publications. The following documents form a part of this document to the extent specified herein. Unless otherwise specified, the issues of the documents which are DoD adopted are those listed in the issue of the DoDISS cited in the solicitation. Unless otherwise specified, the issues of documents not listed in the DoDISS are the issues of the documents cited in the solicitation (see 6.2).

a. ANSI/IEEE 754-1985. IEEE Standard for Binary Floating Point Arithmetic.

(Application for copies should be addressed to the publisher: IEEE, Inc., 345 East 47th St., NY, 10017.)

b. ISO 9660. 1988 (E). International Organization for Standardization Information Processing-Volume and File Structure of CD-ROM for Information Interchange.

(Application for copies should be addressed to the American National Standards Institute, 1430 Broadway, New York, NY 10018.)

2.4 Order of precedence. In the event of a conflict between the text of this document and the references cited herein (except for related associated specifications, specification sheets, or MS standards), the text of this document takes precedence. Nothing in this document, however, supersedes applicable laws and regulations unless a specific exemption has been obtained.

3. REQUIREMENTS

3.1 First article. When specified (see 6.2), a sample shall be subjected to first article inspection in accordance with 4.2.

3.2 Accuracy.

3.2.1 Horizontal accuracy. A formal horizontal accuracy for VITD has not been defined by the users of this product.

3.2.2 Vertical accuracy. A formal vertical accuracy for VITD has not been defined by the users of this product.

3.2.3 Relative accuracy. A formal relative accuracy for VITD has not been defined by the users of this product

3.3 Datum.

3.3.1 Horizontal datum. The horizontal datum shall be referenced to WGS84. If the source map sheets are not referenced to WGS84, then they will be converted from their original horizontal datum to WGS84.

3.3.2 Vertical datum. Vertical datum shall be Mean Sea Level.

3.4 Security.

3.4.1 Security classification. The security classification of the products generated by the use of these specifications will be the lowest category practicable. When it is necessary to assign a security classification to the product, it shall be in accordance with established national security procedures.

3.4.2 Security classification of product. CD-ROM discs containing the VITD data vary in classification depending on the geographic location covered by the data. The CD-ROM will carry the classification of the most restrictive classification of any library contained within that particular compact disc. (TBR)

3.4.3 Security classification of specification. This performance specification is UNCLASSIFIED.

3.5 Continuity. Both the VITD product and TADS database consist of multiple libraries, each library contains the equivalent size of the associated ITD cell, which may cover the general geographic extent of the older TTADB hardcopy overlays. No data overlap should exist in the libraries. Features crossing library boundaries will match as well as the currency of the source material or method of data collection permits. In some cases older cells may not match more recently compiled cells. All VITD/TADS data is subject to the inclusion conditions as stated in Appendix A, Section 6.

3.6 Thematic layer organization. The VITD product and TADS database are organized into thematic layers. Each thematic layer is stored as a single coverage. The CCXXXXXX library each contains six thematic layers (coverages), (see TABLE 1).

3.7 Units of measure. Units of measurement in this product specification are given in the metric system. Actual units of measurement for specific attribute categories are defined in Appendix A, Section 6. Primary units are meters, decimeters, and centimeters.

3.8 VITD/TADS feature and attribute coding scheme. Both the VITD product and TADS database utilize the Digital Geographic

TABLE 1. Thematic layers for CCXXXXXX library.

CCXXXXXX[1] library thematic layers	Coverage name
Obstacles	OBS
Slope/Surface Configuration	SLP
Soil/Surface Materials	SMC
Surface Drainage	SDR
Transportation	TRN
Vegetation	VEG

NOTE:

1. Representative name for which CC represents a country code and XXXXXX represents ITD cell code, e.g., USW64462.

Information Standard (DIGEST), Part 4, Feature and Attribute Coding Catalogue (FACC) to define features, attributes, and attribute values. See Appendix A, Section 6, for a listing of the feature codes, attribute codes, and attribute values allowable for VITD and TADS thematic files.

3.8.1 Unknown, not applicable, and null values. In cases where FACC does not assign an unknown or null attribute value, and one is required to populate a field, refer to Attribute Format Table in Appendix A, Section 7, for the appropriate unknown and null value for the attribute column.

3.8.2 Unknown value condition.

a. The FACC system supports the use of an attribute value which signifies an "unknown" condition. Generally, with few exceptions, FACC implements a value of "0" to represent an unknown data condition for integer values. For text data types of fixed length, the character string "UNK" is entered with the appropriate blank-fill. For text data types of variable length, the character string "UNK" is entered.

b. During data capture, it may not be possible to determine the value of an attribute using the inclusion conditions or collateral data sources. When FACC provides an attribute value to support the "unknown" condition, it must be used. In cases where the "0" value is already used to represent a valid number, an alternative value is needed to represent the unknown condition. These values may be found in Appendix A, Section 6.

c. The following criteria shall be used to implement unknown values not defined in the FACC catalog:

(1) When an "Unknown" value is needed for an attribute and the value "0" is not already used to represent a numeric or other alphanumeric value, then the attribute value "0" will be assigned to represent the attribute definition "Unknown."

(2) If the value "0" is already used to represent another definition, then the range of all positive values should be evaluated and the highest necessary positive value should be used to represent the "Unknown" condition that is composed of all 9s. The standard value used in this specification is 999, which is implemented for DMT Density Measure-Trees and SGC Gradient/Slope attribute categories.

3.8.3 Null value conditions.

a. Some feature classes may have attribute columns present in the feature table that are defined for some features, but not others. In this case a null value is entered for those attribute values when they do not apply to the feature code. The null value will be present in a field when an attribute column is not defined for a feature code.

b. In general, the value -MAXINT, maximum negative integer, is used to represent a null value for integer. For text data types such as the attribute, Text Attribute, the variable length text will have zero length for a null value. For a more thorough description refer to MIL-STD-2407, section 5.5.

3.9 Coordinate system. VITD/TADS data shall be stored in decimal degrees as geographic coordinates. The horizontal resolution for the geographic coordinates shall be stored to the equivalent precision of 0.01 arc-seconds or 0.000002 decimal degrees.

3.10 Data format. VITD and TADS will be produced in Vector Product Format (VPF), which provides a standard format for storing digital vector cartographic data. Refer to the VPF Military Standard (MIL-STD-2407) for more detail on VPF format and structure. This specification, MIL-PRF-89040A, provides guidance for the specific implementation of VITD and TADS in VPF.

3.11 Database description. The TADS database is a vector-based product implemented in VPF. This product is designed to support specialized military GIS applications at a tactical level. Data at this resolution are separated into six thematic layers, where each layer contains a thematically consistent grouping (see TABLE 1). Each coverage contains a set of files that describe and locate the features in that thematic layer.

3.11.1 File structure. TADS data shall utilize the standard Disk Operating System (DOS) directory structure as specified in the VPF DoD Standard, MIL-STD-2407.

3.11.2 Distribution medium. TADS (and VITD) will be distributed on CD-ROM disc implementing ISO 9660 for CD-ROM formatting. Multiple libraries may exist on one CD-ROM.

3.12 VPF table and file structure. Three types of VPF files are implemented in the TADS database: directories, tables, and indexes.

3.12.1 Directories. All TADS database files are contained in a hierarchy of system-level directories in accordance with MIL-STD-2407. Contained within these directories are the tables and indexes that provide information about the database.

3.12.2 VPF tables. Each directory within a TADS database contains VPF tables. A VPF table consists of two parts: (1) a header and (2) data records. See FIGURE 1.

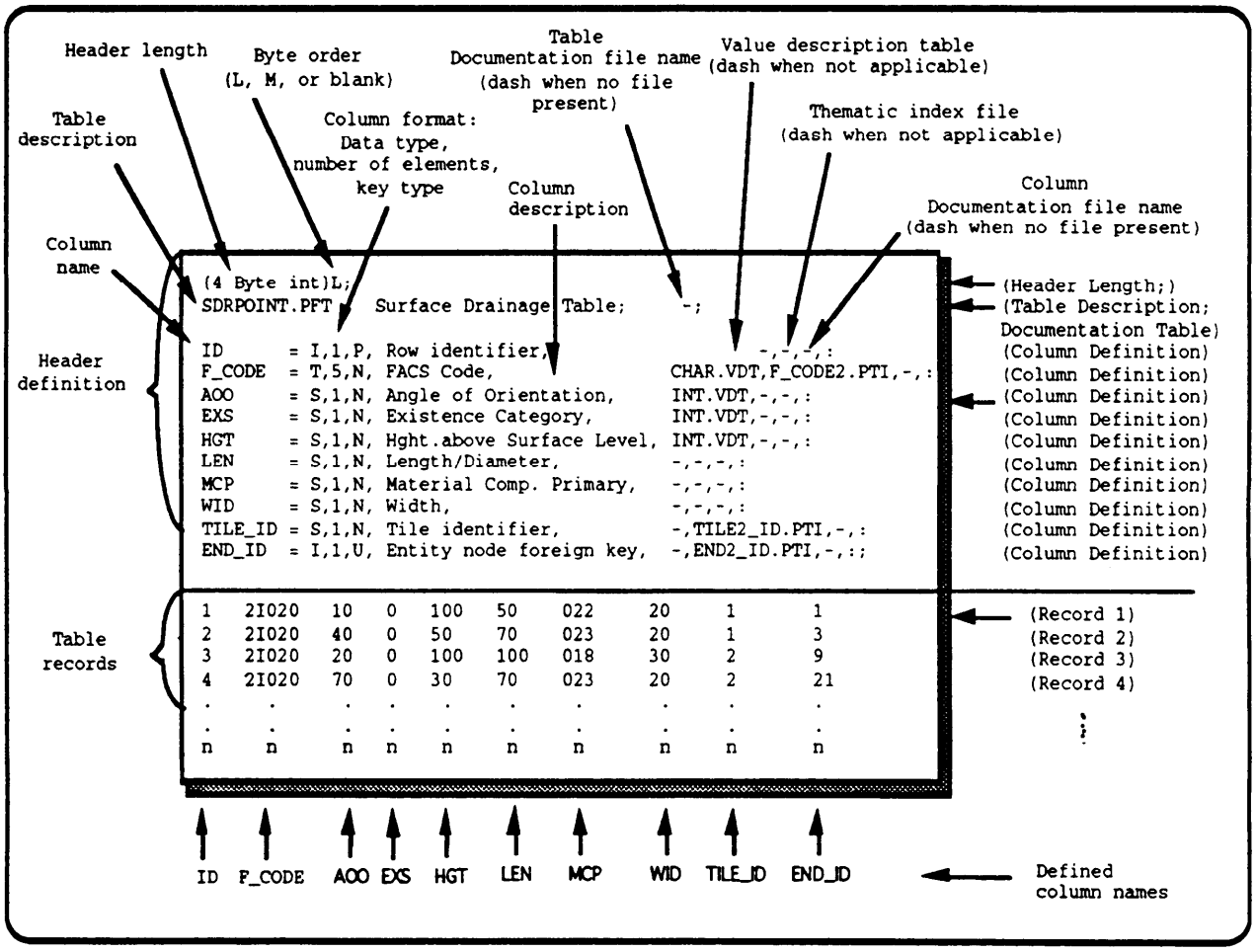

NOTES:

1. The VPF tables defined in this specification shall include all columns specified.
2. Spaces are not a part of the header and are shown for clarity, TADS is untiled, and primitive IDs follow directly after the feature IDs.

FIGURE 1. Illustration of a VPF table.

(This is an approximated example of feature table.)

3.12.2.1 Header.

a. The header of a VPF table defines the table contents, including the column names, column format, and descriptive information. Since all VPF tables are attribute tables, any VPF table may be extended to include additional attribute columns to further describe the characteristics of a database.

b. Each table header is divided into four sections: header length, table description, documentation (or narrative) file name, and the column information that is repeated for each column in the table. A semicolon signifies the end of each header section.

c. The first section contains the header length in bytes, represented as the total length minus the first four bytes that store the header length. This value is immediately followed by a byte order designator, which for TADS is least-significant first and shall be represented by L.

d. The second section provides a textual description of the VPF table contents. A description must be present.

e. The third section defines an optional documentation file for the table. When a documentation file is not applicable to the table, the section will contain a dash character (-).

f. The fourth section contains an entry for each column defined in the table. Entries in this section are delimited by an equal sign (=) or comma (,). The end of each column definition is denoted by a colon (:).

g. The column information is composed of eight entries that are repeated for each column defined for the table. These entries include: column name, data type, number of elements in field, key type, column description, an optional value description table, an optional thematic index name, and an optional documentation file for the column. When a value description table, index file, or documentation table is not present, the field must contain a dash (-). The last column defined in a header must terminate with a colon followed by a semicolon.

h. TABLE 2 provides a description of the format of each entry for a column definition. The spaces depicted in FIGURE 1 are not incorporated into the VPF header, and are shown only for clarity.

3.12.2.2 Column format. The column format provides the field definition for each attribute column of a VPF table. A column format contains three types of information found in the header of the table: the data type, the number of elements (or count), and the key type.

TABLE 2. Schema for VPF header structure.

Header Field	Description	Field Type and Size
Header length	The length in bytes of the ASCII header text string	I,1
Byte order	Byte order in which table is written: L - least-significant first	T,1
	(semicolon separator)	T,1
Table description	Textual description of table	T,n (n<=80)
	(semicolon separator)	T,1
Documentation (Narrative) file name	Name of optional file with additional descriptive information about the related table	T,n (n<=12)
	(semicolon separator)	T,1
Column definition	*The following fields repeat for each column defined in the table*	
Column name	The name of the column	T,n (n<=16)
	(equal sign separator)	T,1
Data type	The data type of the field	T,1
	(comma separator)	T,1
Number of elements[1]	The number of elements in the field	T,n (n<=3)
	(comma separator)	T,1
Key type	The type of key	T,1
	(comma separator)	T,1
Column description	Textual description of the column name or meaning	T,n (n<=80)
	(comma separator)	T,1
Value description table name	Name of an optional VDT that relates to the table	T,n (n<=12)
	(comma separator)	T,1
Thematic index file	Name of optional thematic index	T,n (n<=12)
	(comma separator)	T,1
Documentation (narrative) file name	Name of optional documentation file with additional descriptive information about the column or attribute	T,n (n<=12)
	(comma separator)	T,1
End of column	(colon separator)	T,1
	(repeat for each column)	
End of header	(semicolon separator)	T,1

NOTE:

1. This field contains the number of occurrences of the data type specified, not the number of bytes. For example, if there is only one integer value in the field, the header will contain the number "1" in that field. For text fields only, the value indicates the maximum number of bytes allowed for that column. For example, if a maximum of 12 characters are allowed in the field, then the number of elements is specified as "12". The number of bytes specified for a particular text field are shown in subsequent tables in this specification.

3.12.2.2.1 Data type. The data type is represented by a single character that depicts how the data for that column are stored (e.g., I for long integer, T for text). The data types permitted in the TADS database are depicted in TABLE 3.

3.12.2.2.2 Number of elements. The second value of a field definition represents the number of occurrences of the specified data type in the field. It does not reflect the size of the field in bytes. The number of elements can be translated to bytes using TABLE 3. For example, one count or element of a short integer is 2 bytes.

TABLE 3. Data types permitted in the TADS database.

Data Type	Description	Length in Bytes
I	Long integer	4
S	Short integer	2
F	Short floating point	4
T,n	Fixed-length text string	n
T,*	Variable-length text string	n+4
C,*	2-coordinate string	8n+4
C,n	2-coordinate array (short floating point)	8n
X	Null field	-
D	Date and time	20

3.12.2.2.3 Key type. The third character in the column definition is the key type. The "key type" column is represented by a single character that indicates whether a column is implemented as a primary key, unique key, or nonunique key (TABLE 4).

TABLE 4. Key types permitted in the TADS database.

Key Type	Description
P	Primary key
U	Unique key
N	Non-unique key

3.12.2.3 Data records. Following the header of every VPF table are one or more data rows (or records). Each row contains a set of fields or columns corresponding to the column definitions specified in the table header. (Columns can be of fixed-length or variable-length.) A row identifier, or ID, is required as the first column of every table record and contains sequential integers beginning with the number 1. Column values store the information pertaining to each defined column in each row. Rows can be fixed or variable-length as defined in the header. The column names in every TADS table are unique, and are defined by field type, count of elements, and key type.

3.12.3 Indices. The TADS product contains four types of index files: spatial index files, thematic index files, variable-length index files, and feature index tables. In the TADS product, tables that have an associated index file are all those with variable-length records; all primitive tables; all feature tables; and any metadata tables where a thematic index is defined.

3.12.3.1 Spatial index file.

a. Spatial indices will be defined for all primitive tables. The index is based on the value of the minimum bounding rectangle (MBR) for the face and edge primitive tables. For node primitives, the index is based on the coordinate column in the node primitive table. A spatial index provides the capability to use a set of coordinates to identify a primitive and its associated feature attributes. Spatial indexes are implemented for reduction of data access time for geographic coordinate queries of the TADS database.

b. The spatial indices are: FSI (face spatial index), ESI (edge spatial index), NSI (entity node spatial index), and CSI (connected node spatial index). The format of a VPF spatial index (TABLE 5) is a sequential file of data that is partitioned into three sections:

TABLE 5. Format for a spatial index (*SI) file.

Starting Position (Bytes)	No. of Bytes	Field Type	Description
0	4	Integer	Number of primitives
4	4	Float	Bounding rectangle x1
8	4	Float	Bounding rectangle y1
12	4	Float	Bounding rectangle x2
16	4	Float	Bounding rectangle y2
20	4	Integer	Number of nodes in index
HDR + n * 8	4	Integer	Offset of primitive list for node n
HDR + n * 8 + 4	4	Integer	Primitive count in integer units
HDR+BIN+os+c*8 + 0	1	Byte	Primitive bounding rectangle x1
HDR+BIN+os+c*8 + 1	1	Byte	Primitive bounding rectangle y1
HDR+BIN+os+c*8 + 2	1	Byte	Primitive bounding rectangle x2
HDR+BIN+os+c*8 + 3	1	Byte	Primitive bounding rectangle y2
HDR+BIN+os+c*8 + 4	4	Integer	Primitive ID

NOTES:

1. HDR is the length of the index file header record.
   Where: n ranges from 0 to the number of nodes minus 1
   The variable c is {0 ... number of primitives for a node}; the value c for the first primitive is 0.
   BIN is the summed length of all the bin array records.
   os is the value of the offset variable in the corresponding bin array record.
2. The bucket size of 8 shall be used for the creation of spatial indexes.

3.12.3.1.1 Header record. A header containing an integer defining the number of primitives, the bounding rectangle of the spatial extent of the library, and the number of nodes in the index.

3.12.3.1.2 Bin array record. This record is a two-dimensional array that is the length of the number of primitives defined in the header record. This array contains a long integer offset that points to the beginning of the bin data record and a long integer primitive count for each bin. The offset for the first bin always has a value of zero. For bins that contain no primitive, the value assigned to the count variable is zero and the offset value is undefined. By convention, the offset value of an empty bin points to the end of the data records for the previous bin.

3.12.3.1.3 Bin data record. This file contains the number of primitive records declared in the header. Each record contains four 1-byte integers defining the MBR for primitive and one long integer (4 bytes) for the primitive identifier (ID). These primitive IDs point into the associated primitive tables.

3.12.3.2 Thematic file index.

a. A thematic index file associates the feature code for each feature table to support efficient query response capabilities. The TADS database implements a thematic index on these columns for each point, line, area, and text feature table. Thematic indices are also carried for feature index tables and feature join tables. For the feature index table the feature class identifier (FC_ID), the primitive identifier (PRIM_ID), and feature identifier (FEA_ID) columns are indexed. For the join table the feature identifier (FEA_ID) and primitive identifier (PRIM_ID) columns are indexed.

b. The format of a VPF thematic index is a sequential data file (TABLE 6) that is partitioned into three sections:

3.12.3.2.1 Thematic index header. A fixed-length header of 60 bytes that specifies the associated feature table and the column within that table being indexed.

3.12.3.2.2 Index directory. A directory consisting of a repeating number of records for each distinct element being indexed. The number of entries is stored in the header record.

3.12.3.2.3 Index data.

a. A set of data records, one for each index entry consisting of row IDs from the table being indexed. For each index entry there exists a data record consisting of either a list of row IDs from the indexed file or bit array.

TABLE 6. Format for thematic index (*.*TI) file.

Starting Position (Bytes)	No. of Bytes	Field Type	Description
0	4	Integer	Combined length of the index file header and index directory.
4	4	Integer	Number of directory entries. This is the number of items being indexed by a particular index file.
8	4	Integer	Number of rows in the data table being indexed.
12	1	Char	Type of index file ("I" for inverted list index).
13	1	Char	Type of data element being indexed: one of: I, T, or S.
14	4	Integer	Number of data elements comprising one directory entry (usually 1); except for a thematic index built on a text field.
18	1	Char	Type specifier for the data portion of the index file. Record IDs in inverted list index can be stored using either type "S" (2-byte integer) or type "I" (4-byte integer).
19	12	Char	Name of the VPF table being indexed with no path.
31	25	Char	Name of the column in the VPF table being indexed.
56	1	Char	Ordering flag ("S" indicates ascending order in the index directory).
57	3	Char	Unused.
60+n*(d+8)	d	Char Short float Integer Float Double	The element being indexed (the code value from the attribute column of the table being indexed).
60+n*(d+8)+d	4	Integer	The byte offset from the beginning of the file where the row of IDs associated with this index entry is located.
60+n*(d+8)+d+4	4	Integer	The number of indexed items associated with this entry.
os	-	-	Record IDs from the table being indexed.

LEGEND:

n ranges from 0 to number of index entries minus 1
d = size of (indexed type)
os = offset value at a given location (60+n*(d+8)+d)

b. Thematic indexes are contained within files having one of five suffixes: ATI (area thematic index), LTI (line thematic index), PTI (point or node thematic index), FTI (feature table index), and JTI (join table index).

3.12.3.3 Variable-length index file.

a. A variable-length index file is mandatory for all VPF tables containing variable-length text or variable-length coordinate fields. The index file specifies the starting position in bytes for variable-length text or coordinate records, and the length in bytes for each variable-length record in the table. This index is a separate file containing two parts, a header and a data array that specifies the byte offset from the beginning of the file for each record. Byte offset refers to a location with respect to the beginning of a file. The first byte of a file has an offset of zero. These indexes are implemented to permit direct data access for records having variable-length fields; direct access accelerates data retrieval. The format for a variable-length index file is presented in TABLE 7.

TABLE 7. Format for variable-length index (*.**X or **X) files.

Starting Position (Bytes)	No. of Bytes	Data Type	Description
0	4	Integer	Number of records (N) in table being indexed
4	4	Integer	Number of bytes in header of VPF table being indexed
8	8N	Integer	A two-dimensional array of N integers defined as: [n][0]=Byte offset from beginning of file [n][1]=Number of bytes in table record where n ranges from 1 to N

b. Variable-length index file names have a prefix that is the same as the VPF table prefix. The first two characters of the index file suffix are the first two characters of the VPF table suffix. The third character must be 'X'. The one exception to this convention is for the FCS, whose variable-length index shall be named FCZ.

3.12.3.4 Feature index table. A feature index table is implemented for TADS (refer to 3.14.4.1.3).

3.13 TADS directory organization.

3.13.1 Structure-level directories. TADS digital files are organized in directories that correspond to VPF structure levels (FIGURE 2). The directories representing VPF structure levels include database, library, coverage, and feature class.

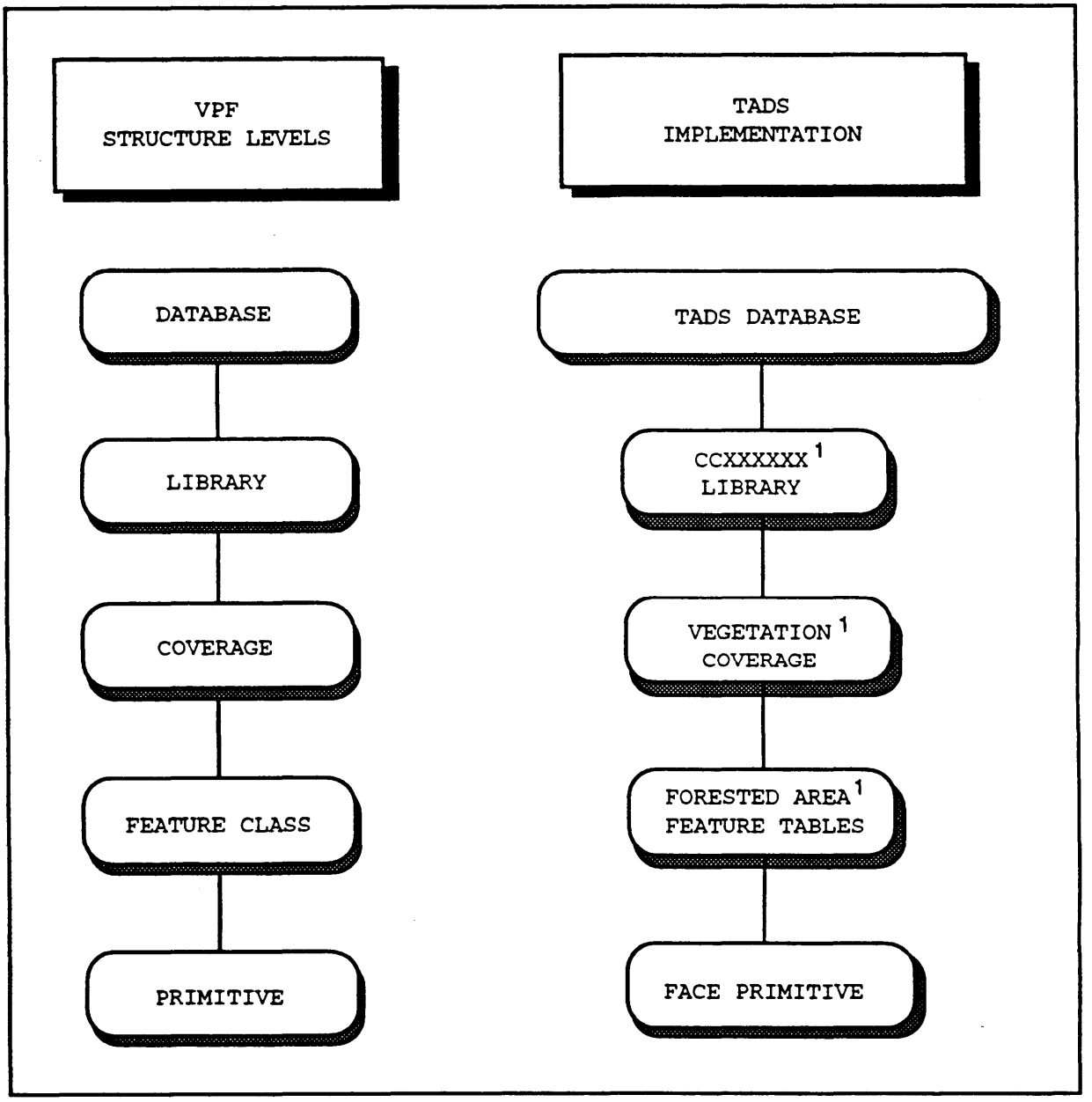

NOTE:

1. Names for example only

FIGURE 2. VPF structure levels and TADS implementation.

3.13.2 Library directories. Each TADS library directory may contain six thematic coverage directories (SLP, SMC, VEG, SDR, TRN, and OBS). Library directory names shall reflect the geographic extent of the library and will be provided to the producer as part of the source package.

3.14 VPF structure levels, tables, and files.

a. The following sections describe the tables and files present according to VPF structure level. The structure levels are presented as follows: database, library, coverage, feature class, and primitive. All directory names and file names shall be represented in lower case (most examples in this document are shown in capital letters). Each VPF directory contains files in the form of VPF tables and indices that provide information about the TADS database.

b. The record layout and content of the TADS VPF tables and files are described in Appendix A.

3.14.1 Database-level directory files. TADS contains one database directory. The TADS directory shall be present on each CD-ROM containing TADS libraries. The files contained in the TADS database level are described below. A representation of files appearing in the TADS database level are depicted in FIGURE 3.

3.14.1.1 Database metadata. The database directory contains two required VPF metadata tables. The required tables include the Library Attribute (or Extent) Table (LAT), and Database Header Table (DHT). (See TABLE 8.)

TABLE 8. TADS database-level table and file names and description.

Table or File Description	Table or File Name
TADS database directory	TADS
Library Attribute (Extent) Table	LAT
Database Header Table	DHT
Library directories	CCXXXXXX/[1]

NOTE:
1. This is a representative directory name for a TADS library.

a. The LAT defines the names of each library in the TADS database and the geographic extent of each library. The LAT contains an XMIN and YMIN column that represent the longitude and latitude of the southwest corner of a library. The XMAX and YMAX columns represent the longitude and latitude of the northeast corner of a library.

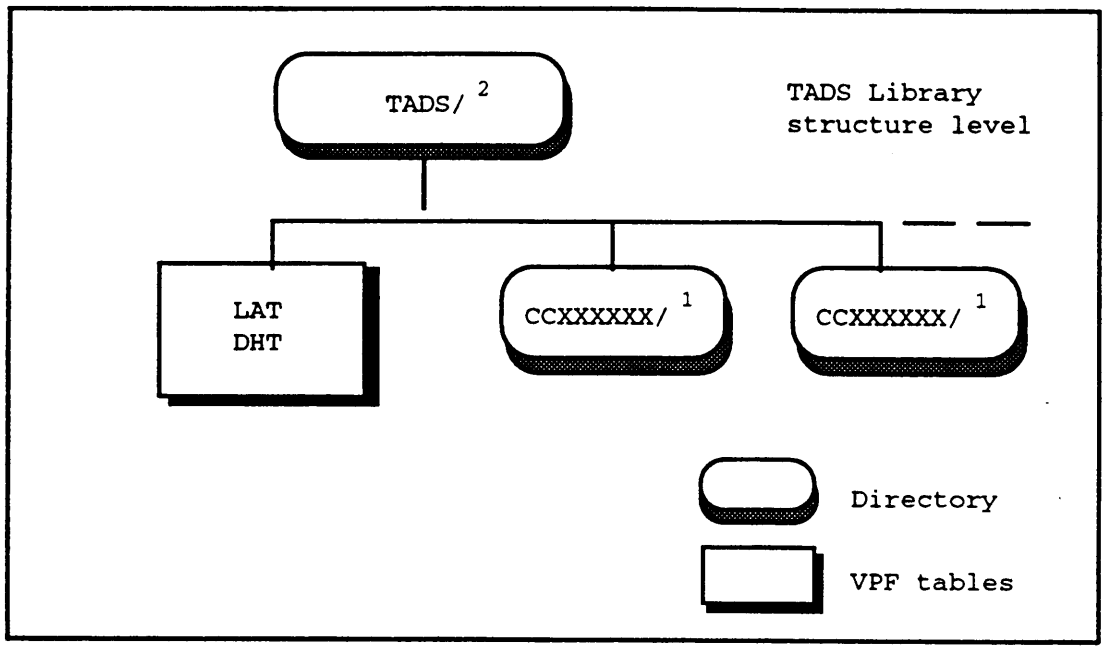

NOTES:

1. This is a representative directory name for TADS libraries; the format will be ccxxxxxx, where cc represents a country code and xxxxxx represents ITD cell code.
2. Actual database names may vary based on geographic area and number of libraries per database.

FIGURE 3. TADS database structure-level tables and files.

b. The DHT provides information pertinent to the entire TADS database. The database header table provides information such as the VPF version used to implement the database and security information for the entire database.

3.14.2 Library-level directory files. The contents of each TADS library are stored in a directory whose name shall be no more than eight characters in length. The entire contents of one or more TADS libraries shall be contained on a CD-ROM. A representation of files present in the TADS library level is given in FIGURE 4.

3.14.3 Library metadata. Each library directory shall contain four required metadata tables, one variable-length index, and optional narrative table. These include the coverage attribute (description) table (CAT), library header table (LHT), geographic reference table (GRT), data quality index (DQX), data quality table (DQT). Each TADS library must contain these four VPF files, the index, and an optional narrative (.DOC) table (See TABLE 9).

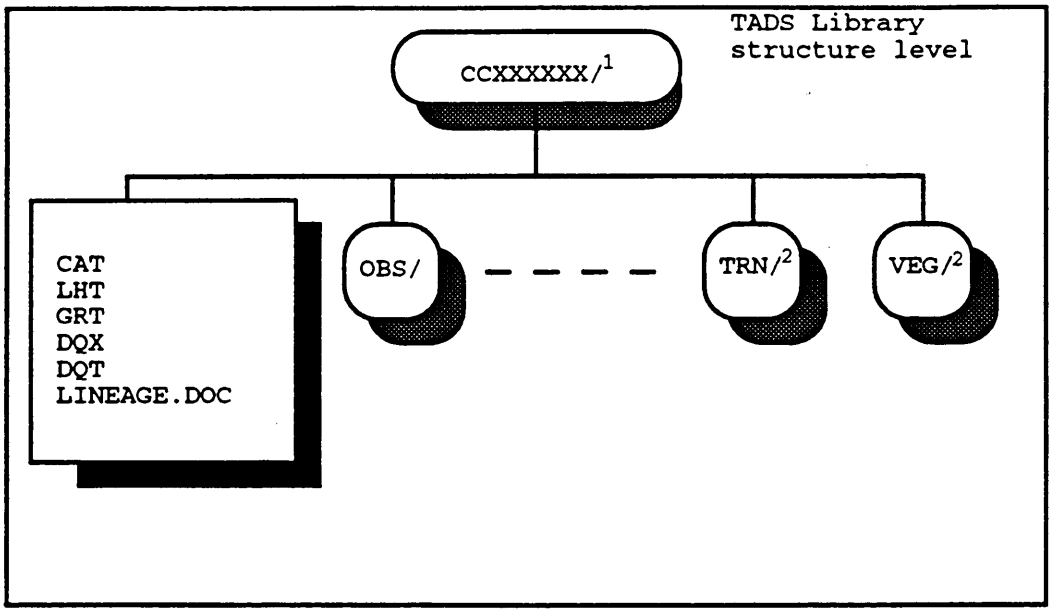

NOTES:

1. This is a representative directory name for TADS libraries, format CCXXXXXX
2. These represent coverage-level coverage directories.

FIGURE 4. TADS library structure level.

TABLE 9. TADS library level directories, tables, indices, and description.

Table or File Description	Table or File Name
Library Directory	CCXXXXXX/[1]
Coverage Attribute (Description) Table	CAT
Library Header Table	LHT
Geographic Reference Table	GRT
Data Quality Index File	DQX
Data Quality Table	DQT
Lineage Documentation File	LINEAGE.DOC

NOTE:

1. This is a representative directory name for TADS libraries.

a. The CAT contains the name of each coverage (stored at the coverage level) present in a library, including a brief description of each coverage and its topology level. The coverage description column is the equivalent of the thematic layer name. For a discussion of topology see MIL-STD-2407.

b. The LHT identifies the library name, contains information regarding source data, and provides security information.

c. The GRT contains geographic reference metadata regarding the ellipsoid, datum characteristics, and projection information for each TADS library.

d. The DQX is a variable-length index file to the DQT. The DQT contains data quality information pertinent to the particular TADS library.

e. The DQT contains information pertaining to the feature completeness, consistency, compilation date, attribute accuracy, and positional accuracy of the data. The DQT table contains variable-length text records and therefore has an associated variable-length index file (DQX) to reference variable-length text fields.

f. The LINEAGE.DOC table is a data quality file. The table describes how the data were processed for the database. It provides a textual description of the sources used to compile the data in each TADS library.

3.14.4 Coverage-level directory files. All six thematic coverages are contained within a library directory. Thematic coverages share the same coordinate system, are spatially registered to one another, and contain primitive tables. A representation of files in the TADS coverages are depicted in FIGURE 5. A list of the TADS coverage directories and brief description are shown in TABLE 10.

TABLE 10. Coverage directories and descriptions for CCXXXXXX coverages.

Coverage Description	Coverage Name
Obstacles	OBS
Slope/Surface Configuration	SLP
Soil/Surface Materials	SMC
Surface Drainage	SDR
Transportation	TRN
Vegetation	VEG

3.14.4.1 Coverage metadata. The metadata tables present and their content will vary with each coverage. Each coverage directory shall contain one feature class schema table (FCS). All coverages that contain feature tables having the FACC feature code column will have a character value description table (CHAR.VDT). If additional FACC attributes are present that require description of their values, then an integer value description table (INT.VDT) may be present. The metadata tables at the coverage level are shown in TABLE 11.

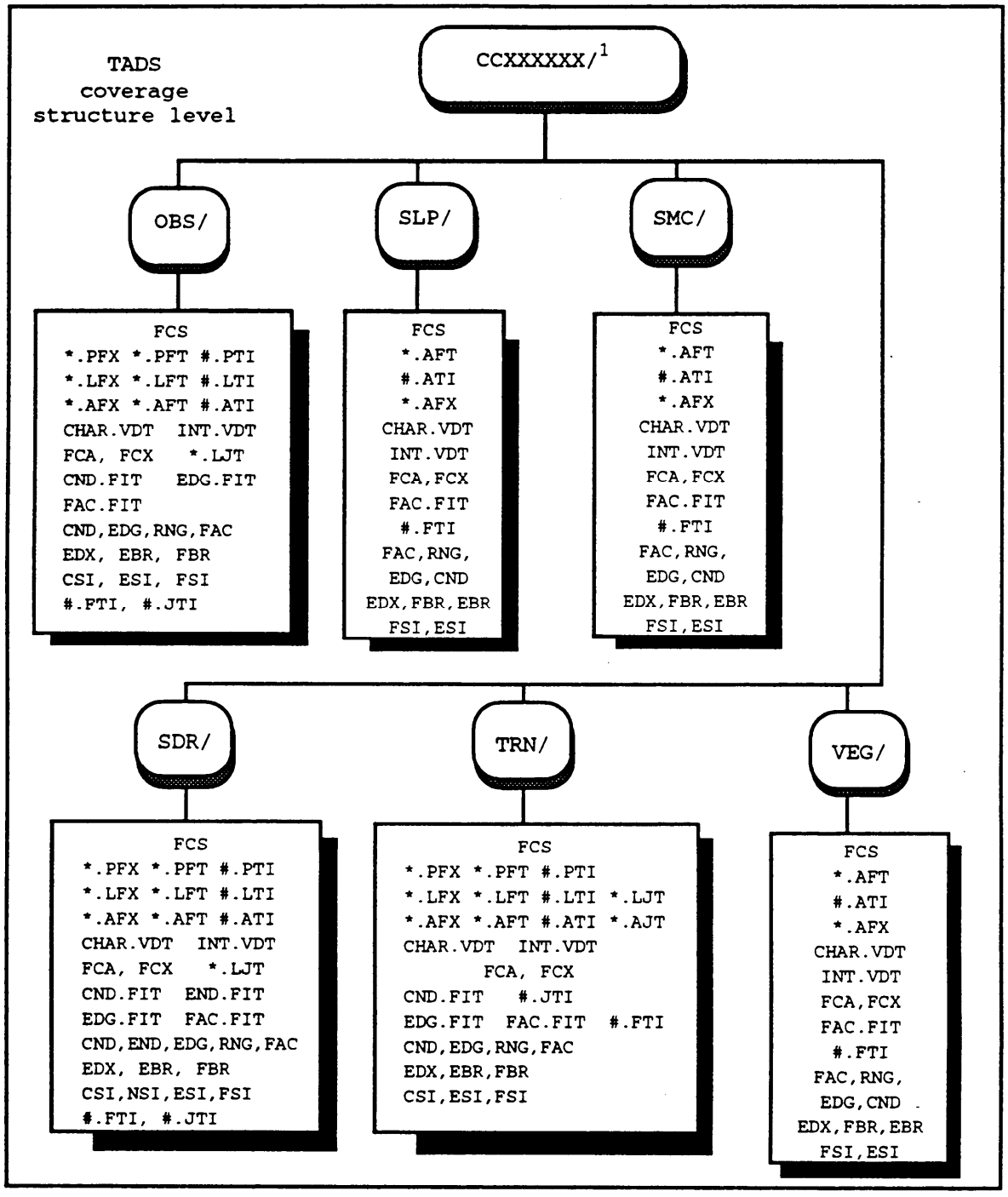

NOTES:

1. These are representative TADS library directory names.

* The asterisk is replaced with the prefix of the point, node, line, or area feature class name.

\# The pound sign is replaced with the prefix of the thematic index name, which is based on the column name to which the index refers.

FIGURE 5. Coverage level roadmap.

TABLE 11. TADS coverage-level metadata tables and description.

Table Name	Table Description
FCS	Feature class schema table
CHAR.VDT	Character value description table
INT.VDT	Integer value description table
FCA	Feature Class Attribute table
FCX	Variable Length Text file for FCA

3.14.4.1.1 Feature class schema table. Each TADS coverage shall contain one feature class schema table (FCS). The FCS defines the relationship between two tables, principally between a feature table and its associated primitive table. The FCS may also define relationships between feature tables and related attribute tables.

3.14.4.1.2 Value description tables. The VDTs provide descriptions (or meanings) of unique FACC attribute values contained in a feature table. A value description table shall be referenced for all coded attribute values. CHAR.VDT tables provide the meanings of the FACC feature codes that are stored as a character data type. INT.VDT tables provide meanings for FACC attribute values that are represented as either long or short integers. Each record in a value description table contains a feature table name, an attribute name, the attribute value, and the meaning specified for that value. Attribute names are repeated in subsequent records when multiple attribute values exist for the feature tables in a coverage. For example, the FACC attribute BCC-Bridge Bypass Condition may have 0, 1, 2, and 3 as possible coded values. These values would be described in an integer value description table. In this case the integer value description table will contain four records, each containing the meaning of these values ("Unknown", "Easy to Cross", "Difficult to Cross", and "Impossible to Cross", respectively.) The name of the value description table associated with an attribute column is indicated in the header of each feature table. The value description tables implemented in each coverage are provided in Appendix A, Section 6.

3.14.4.1.3 Feature index.

a. A feature index is created for each data coverage. This index is composed of (1) a feature class attribute table (FCA) and (2) a number of feature index tables (FIT). Feature index tables allow quick retrieval of feature information when given a selected primitive. In a coverage there will be one FIT for each primitive type that has a relationship to a feature table. When a FIT is defined for a coverage, all feature classes in that coverage will be indexed. All FCA and FITs reside at the coverage level.

b. The Feature Class Attribute table (see TABLE 12) will have the following columns: a feature class ID column (ID), a feature class name column (FCLASS), the feature type (TYPE) and a feature class description column (DESCR).

TABLE 12. Feature class attribute table (FCA) definition.

{Header Length}L;			
Feature Class Attribute Table;-;			
ID=I,1,P,Row Identifier,-,-,-,:			
FCLASS=T,8,U,Feature Class Name,-,-,-,:			
TYPE=T,1,N,Feature Type,CHAR.VDT,-,-,:			
DESCR=T,*,N,Description,-,-,-,:;			
1	SDRPOINT	P	Dam on area
2	SDCLINE	L	Canal and river line
3	SDRAREA	A	Open water and island
⋮	⋮	⋮	⋮
n	n	n	n

c. Every primitive/feature reference results in one entry in the appropriate FIT for that primitive and the corresponding feature.

d. Feature Index Tables (see TABLE 13) contain the feature class ID (FC_ID) and the feature ID (FEATURE_ID) columns to properly identify an individual geographic feature, and the primitive ID (PRIM_ID) for a primitive. Available FIT names are EDG.FIT, CND.FIT, END.FIT, and FAC.FIT.

TABLE 13. Format and example of content for feature index table (END.FIT) for an entity node.

{Header Length}L;			
Feature Index Table;-;			
ID=I,1,P,Row Identifier,-,-,-,:			
PRIM_ID=I,1,N,Primitive ID,-,END1FIT.FTI[1],-,:			
FC_ID=I,1,N,Feature Class ID,-,END2FIT.FTI,-,:			
FEATURE_ID=I,1,N,Feature Table ID,-,END3FIT.FTI,-,:;			
1	23	1	1
2	189	1	56
3	566	1	787
4	76	1	452
⋮	⋮	⋮	⋮
n	n	n	n

NOTE:

1. Example name of the index based on the primitive type and referenced columns (1=primitive, 2=feature class, and 3=feature) of FIT.

3.14.4.1.4 Feature join tables. These tables are used to combine multiple feature tables, primitive tables, and attribute tables into relational form. A feature join table connects the row of the feature with rows of a feature or primitive table. A join is used to relate one column in a table with a column in a second table. TABLE 14 defines a feature join table contents.

TABLE 14. Example of line join table.

{Header Length}L; TRRLINE.LJT,Railroad Line Join Table;-; ID=I,1,P,Row Identifier,-,-,-,: TRRLINE.LFT_ID=I,1,N,Feature Key,-,TRRLINE4.JTI,-,: EDG_ID=I,1,N,Primitive primary Key,-,EDG4.JTI,-,:;		
1	2	67
2	2	68
3	2	69
4	4	121
⋮	⋮	⋮
n	n	n

a. On the obstacles, surface drainage, and transportation coverages that contain line feature tables, linear join tables will be implemented. These tables relate such features as roads, railroads, streams, and walls, where one linear feature may share many edge primitives. An area join table will be implemented for area railroad yard features to account for multiple face primitives. These relationships will be based entirely on how the data was originally collected, no new processing or grouping of these features or primitives that would change this relationship will be performed, unless the original data was related incorrectly.

b. For coincident features, many features to one primitive such as point bridge and bridge spans, a join column on the feature table will be implemented rather than a separate join table.

3.14.4.2 Coverage-level coverages. All TADS libraries may contain six coverages. The contents of each coverage are stored in a directory whose name shall be represented in lower case letters (table examples are shown in upper case) with a three-character name representative of the thematic layer name (See TABLE 10). Coverage-level directories are stored at the VPF coverage level, and reside as subdirectories of each TADS library directory.

3.14.4.3 Coverage topology. The topology level of each coverage is specified in the coverage attribute (description) table (CAT).

3.14.5 Feature class structure level.

3.14.5.1 Feature class definition.

a. A feature class consists of a thematically consistent set of data with all features in a feature class sharing the same attribute columns. A feature class is logically defined as the combination of a feature table and a geometric primitive table. For example, the SDRPOINT feature class is composed of the Surface Drainage point feature table (SDRPOINT.PFT) and the related set of primitives in the entity node primitive table (END).

b. Although a feature class is considered to be a structure level of VPF, along with the database, library, and coverage levels, feature classes are not represented as directories. Rather, the feature class levels are represented by a combination of files stored at the coverage level. A feature class is defined as a group of features sharing a homogeneous set of attributes and consists of one or more attribute categories and one or more primitive tables. These primitive tables store the spatial and geometric information defining the location of the features. Each coverage will contain at least one feature class.

c. The definition of all possible features and attributes for each feature class in the TADS is presented in Appendix A, Section 6.

3.14.5.1.1 Feature class metadata. All feature class metadata tables are defined at the coverage level.

3.14.5.1.2 Feature class types. The TADS database contains four types of feature classes: point, node, line, and area. Consequently there are four types of feature tables that may comprise a feature class. Feature tables are named using the feature class name as the prefix and a predefined VPF suffix. The suffixes for each feature class type are shown in TABLE 15. Point feature tables and node feature tables contain the same suffix (.PFT).

TABLE 15. Feature table suffixes.

Table name	Suffix
Point Feature Table	.PFT
Node Feature Table	.PFT
Line Feature Table	.LFT
Area Feature Table	.AFT

3.14.5.1.3 Feature class/feature table names. Feature class names and descriptions are product-specific. For example, in the TRN coverage, one of the line feature class names is TRRLINE. The text description for this feature class is "Transportation Railroad Line feature class." The TRRLINE feature class name is

used as the prefix for the feature table name. The Transportation Railroad Line feature table name is therefore, TRRLINE.LFT as shown in TABLE 16. See Appendix A, Section 6 for all features for the complete feature class names and their contents.

TABLE 16. TADS coverage-level coverages and feature classes.

Coverage name (description)	Feature classes			
	Point	Node	Line	Area
OBS (Obstacles)		OBSNODE	OBSLINE	OBSAREA
SLP (Slope/Surface Configuration)				SLPAREA SLWAREA
SMC (Soil/Surface Material)				SMCAREA SMWAREA
SDR (Surface Drainage)	SDRPOINT	SDRNODE	SDRLINE SDCLINE	SDRAREA SDCAREA
TRN (Transportation)		TRNNODE TRBDGND	TRBLINE TRDLINE TRNLINE TRRLINE	TRNAREA
VEG (Vegetation)				VEGAREA VGWAREA VGFAREA

3.14.5.1.4 Number of feature classes. The complete set of possible feature classes within each coverage is described in this specification; however, only those feature classes containing data need be present in a coverage. The presence or absence of a feature class depends upon data content, availability, and geographic location.

3.14.5.1.5 Point feature class. A point feature class is composed of a point feature table (PFT) in combination with an entity node table (END). For instance, the SDRPOINT point feature class contains attributes in the Surface Drainage Point feature table (SDRPOINT.PFT). The coordinate locations of these features are stored as entity node primitives in an entity node table (END).

3.14.5.1.6 Node feature class. Another type of point feature class is composed of a node feature table (PFT) in combination with a connected node table (CND). SDRNODE is an example of a node feature class with connected nodes. This feature class contains attributes in the Surface Drainage Node point feature table (SDRNODE.PFT), which defines prepared raft or float bridge sites, fords, locks, and geographic information points (miscellaneous features). The coordinate locations of these features are stored as connected node primitives in a connected node table (CND). A node feature class may only be

present when a line feature class exists and the nodes are located on the ends of the line features.

3.14.5.1.7 Line feature class. A line feature class is composed of a line feature table in combination with an edge table (EDG). For instance, the TRDLINE line feature class contains attributes in the Transportation Road Line feature table (TRDLINE.LFT), which defines roads. The primitives representing the spatial location of these features are located in the edge primitive table (EDG).

3.14.5.1.8 Area feature class. An area feature class is composed of an area feature table and a face (FAC) table. For example, the VEGAREA area feature class contains the attributes in the Vegetation Area Feature Table that define an area as land subject to inundation, cropland, vineyards, etc. The face table (FAC) points to the ring (RNG) table, which in turn points to the edge table (EDG).

3.14.5.2 Feature table structure and contents. All feature tables follow a similar structure. Each contains a row identifier column (or ID). The column F_CODE contains a five-character FACC feature code value. The remaining attribute columns, if present, contain a three-character value that represents an attribute code. Sample point, node, line, and area feature tables are presented in TABLES 17 through 20.

TABLE 17. Format and example of content for a point feature table (SDRPOINT.PFT).

```
{Header length}L;
SDRPOINT.PFT,Surface Drainage Point Feature Table;-;
ID=I,1,P,Row Identifier,-,-,-,:
END_ID=I,1,N,Entity Node Primitive ID,-,-,:
F_CODE=T,5,N,FACC Feature Code,CHAR.VDT,-,-,:
EXS=I,1,N,Existence Category,INT.VDT,-,-,:
HGT=I,1,N,Height Above Surface Level (meters),INT.VDT,-,-,:
LEN=I,1,N,Length/Diameter (meters),INT.VDT,-,-,:
MCC=I,1,N,Material Composition Category,INT.VDT,-,-,:
WD5=I,1,N,Width Top (meters),INT.VDT,-,-,:;
```

1	67	BI020	1	10	50	21	0
2	89	BI020	1	12	77	21	20
⋮	⋮	⋮	⋮	⋮	⋮	⋮	⋮
n	n	n	n	n	n	n	n

TABLE 18. Format and example of content for a node feature table (TRNNODE.PFT).

```
{Header Length}L;
TRNNODE.PFT,Transportation Node Feature Table;-;
ID=I,1,P,Row Identifier,-,-,-,:
CND_ID=I,1,N,Connected Node Primitive ID,-,-,-,:
F_CODE=T,5,N,FACC Feature Code,CHAR.VDT,F_CODE2.PTI,-,:
EXS=I,1,N,Existence Category,INT.VDT,-,-,:
LEN=I,1,N,Length/Diameter (meters),INT.VDT,-,-,:
OHC=I,1,N,Overhead Clearance Category (decimeters),INT.VDT,-,-,:
TUC=I,1,N,Transportation Use Category,INT.VDT,-,-,:
TXT=T,*,N,Text Attribute,-,-,-,:
WD1=I,1,N,Minimum Travelled Way Width (decimeters),INT.VDT,-,-,:;
```

1	23	AQ058	-	-	-	-	0-len	30
2	34	AQ070	1	-	-	3	0-len	-
3	44	ZD012	-	-	-	-	culvert over ditch	-
⋮	⋮	⋮	⋮	⋮	⋮	⋮	⋮	⋮
n	n	n	n	n	n	n	n	n

NOTE:

1. For this example "-" indicates null values (-Maxint) and '0-len' zero length null for variable length text.

TABLE 19. Format and example content for a line feature table (TRRLINE.LFT).

```
{Header length}L;
TRRLINE.LFT,Transportation Railroad Line Feature Table;-;
ID=I,1,P,Row Identifier,-,-,-,:
F_CODE=T,5,N,FACC Feature Code,CHAR.VDT,F_CODE4.LTI,-,:
CTL=I,1,N,Cumulative Track Length (meters),INT.VDT,-,-,:
EXS=I,1,N,Existence Category,INT.VDT,-,-,:
FCO=I,1,N,Feature Configuration,INT.VDT,-,-,:
LEN=I,1,N,Length/Diameter (meters),INT.VDT,-,-,:
RRA=I,1,N,Railroad Power Source,INT.VDT,-,-,:
RRC=I,1,N,Railroad/Road Categories,INT.VDT,-,-,:
RSA=I,1,N,Railroad Spur/Siding Attribute,INT.VDT,-,-,:;
```

1	AN010	-	1	3	-	1	5	-
2	AN060	68000	1	-	-	1	5	-
⋮	⋮	⋮	⋮	⋮	⋮	⋮	⋮	⋮
n	n	n	n	n	n	n	n	n

TABLE 20. Format and example content for an area feature table (SDRAREA.AFT).

{Header Length}L;			
SDRAREA.AFT,Surface Drainage Area Feature Table;-;			
ID=I,1,P,Row Identifier,-,-,-,:			
FAC_ID=I,1,N,Face Primitive ID,-,-,:[1]			
F_CODE=T,5,N,FACC Feature Code,CHAR.VDT,F_CODE1.ATI,-,:			
TXT=T,*,N,Text Attribute,-,-,-,:;			
1	56	ZD012	Temporary impoundment
⋮	⋮	⋮	⋮
n	n	n	n

NOTE:

1. For TRNAREA.AFT feature class, FAC_ID column is not present, because the column is contained in the join and feature index tables.

3.14.6 Primitive tables and associated files.

a. TADS data contain up to four geometric primitive types. The geometric primitive tables are entity node, connected node, edge, and face. Primitive tables also contain the coordinate values that locate the geographic positions of the nodes, edges, and faces. The primitive tables and associated files are shown in TABLE 21.

TABLE 21. Primitive table and associated files.

Example of Feature Table	Primitive Table	Table Description
Line feature table	ESI	Edge spatial index file
	EBR	Edge bounding rectangle table
	EDX	Edge variable-length index file
	EDG	Edge primitive table
Area feature table	FSI	Face spatial index file
	FBR	Face bounding rectangle
	FAC	Face primitive table
	RNG	Ring table
Point feature table	NSI	Entity node spatial index file
	END	Entity node primitive table
Node feature table	CSI	Connected node spatial index file
	CND	Connected node primitive table

b. Other VPF tables associated with primitives include ring tables, spatial index tables, variable-length index tables, and bounding rectangle tables. This section provides the format for a ring table and for bounding rectangle tables. The format for spatial and variable-length index tables is provided in 3.12.3.

3.14.6.1 Entity node primitive table.

a. In the TADS database, entity nodes represent point features such as dams. The coordinates in an entity node primitive table represent the geographic positions of point features that are not connected to edges. The entity node table is topologically linked to the face primitive table by the CONTAINING_FACE column.

b. The entity node primitive table may be composed of the following VPF columns: the row identifier (ID), a containing face column (CONTAINING_FACE), and a coordinate column (COORDINATE) containing the x,y coordinate values of the entity node. The format for an entity node primitive table is shown in TABLE 22.

TABLE 22. Format and example of content for entity node primitive table (END).

{Header Length}L; Entity Node Primitive Table;-; ID=I,1,P,Row Identifier,-,-,-,: CONTAINING_FACE=I,1,N,Foreign Key to Face Table,-,-,-,: COORDINATE=C,1,N,Coordinates of Entity Node,-,-,-,:;		
1	2	-7.893952 43.774712
2	3	-7.893897 43.773613
3	4	-7.843663 43.768391
⋮	⋮	⋮
n	n	x.xxxxxx y.yyyyyy

3.14.6.2 Connected node primitive table.

a. In the TADS database, connected nodes represent node features such as prepared raft or float bridge sites, fords, and locks that intersect line features. Connected nodes are used in two ways: 1) to define the edges topologically, start and end nodes, and 2) to represent a node feature that exists at start or end node of an edge. The coordinates for connected nodes are stored in a connected node table. The edges that are connected to nodes are topologically linked by the FIRST_EDGE column in the connected node table. No CONTAINING_FACE column will be present in a connected node table.

b. The connected node primitive table is composed of the following VPF columns: the row identifier (ID), the first edge (FIRST_EDGE) column, and a coordinate column (COORDINATE) containing the x,y coordinate values of the connected node. The format for a connected node primitive table is shown in TABLE 23.

TABLE 23. Format and example of content for connected node primitive table (CND).

{Header Length}L;		
Connected Node Primitive Table;-;		
ID=I,1,P,Row Identifier,-,-,-,:		
FIRST_EDGE=I,1,N,Foreign Key to Edge Table,-,-,-,:		
COORDINATE=C,1,N,Coordinates of Connected Node,-,-,-,:;		
1	2	7.893952 43.774712
2	3	7.893897 43.773613
3	4	7.843663 43.768391
⋮	⋮	⋮
n	n	x.xxxxxx y.yyyyyy

3.14.6.3 Edge primitive table.

a. In the TADS database, edges represent linear features such as aqueducts or roads. Edges also define the borders of faces, which represent areal features such as soil polygons, lakes, and forest. Edges are topologically (1) linked to the nodes at the end of each edge, and (2) the faces on each side of an edge when faces are present in the same coverage (level 3 topology).

b. Edge primitives and their topology are stored in edge primitive tables. Edge primitive tables contain either six or eight VPF columns, depending on the topology level of the coverage. Coverages with level 1 and 2 topology require only six columns to establish connectivity between neighboring edges. Coverages with level 3 topology require two additional columns (RIGHT_FACE and LEFT_FACE) in order to establish connectivity between the edge and the adjoining faces. Every edge table contains a coordinate column containing the x,y coordinate values for each edge. The right and left edges establish winged-edge topology for both line networks and faces. If all edges incident at the node are sorted according to the bearing each edge radiates from that node, the right edge of a particular edge is the first edge encountered, counterclockwise in the sort order, around the end node of that encountered, particular edge. Similarly, the left edge is the first encountered around the start node. The format for edge primitive tables is shown in TABLE 24.

3.14.6.4 Face primitive table.

a. In the TADS database, faces represent areal features such as open water. Faces are areas enclosed by edges. All faces are defined by the set of edges composing the face border. All faces are topologically linked to the appropriate edge table through the ring table.

TABLE 24. Format and example of content for edge (EDG) primitive table.

{Header Length}L; Edge Primitive Table;-; ID=I,1,P,Row Identifier,-,-,-,: START_NODE=I,1,N,Start/Left Node,-,-,-,: END_NODE=I,1,N,End/Right Node,-,-,-,: [1]RIGHT_FACE=I,1,N,Right Face,-,-,-,: [1]LEFT_FACE=I,1,N,Left Face,-,-,-,: RIGHT_EDGE=I,1,N,Right Edge from End Node,-,-,-,: LEFT_EDGE=I,1,N,Left Edge from Start Node,-,-,-,: COORDINATES=C,*,N,Coordinates of Edge,-,-,-:;

1	1	2	6	1	29	26	-10.000000 45.000000
2	3	5	5	8	30	76	- 7.700000 43.690000
⋮	⋮	⋮	⋮	⋮	⋮	⋮	⋮
n	n	n	n	n	n	n	x.xxxxxx y.yyyyyy

NOTES:

1. The RIGHT_FACE and LEFT_FACE columns are required only for coverages with level 3 topology.
2. Since join tables are implemented, *.LFT_ID column is eliminated.

b. Face primitives and their topology are stored in face primitive tables. Face primitive tables in the TADS database contain the two required VPF columns: a row identifier (ID), and a ring pointer column (RING_PTR), which is a foreign key to a ring table. The face table identifies all faces present in a coverage. It is through the topologic link with a ring table that the relationship between a face, its associated edges, and other surrounding faces is defined. The format for a primitive table is shown in TABLE 25.

TABLE 25. Format and example of content for face (FAC) primitive table.

{Header Length}L; Face Primitive Table;-; ID=I,1,P,Row Identifier,-,-,-,: RING_PTR=I,1,N,Foreign Key to Ring Table,-,-,-,:;

1	1
2	13
3	14
⋮	⋮
n	n

3.14.6.5 Ring table.

a. Rings are connected sets of edges that compose both the external and internal border of a face. The ring table is topologically linked to the face table and edge table within a coverage. The ring table contains three columns: a ring row identifier column (ID), face identifier column (FACE_ID), and a starting edge column (START_EDGE). The first entry in the ring table for a particular face contains the outer ring of that face. The format for all ring tables and an example of content is shown in TABLE 26.

b. A ring table is present when a face primitive table is present.

TABLE 26. Format and example of content for ring (RNG) table.

{Header Length}L; Ring Table;-; ID=I,1,P,Row Identifier,-,-,-,: FACE_ID=I,1,N,Foreign Key to Face Table,-,-,-,: START_EDGE=I,1,N,Foreign Key to Edge Table,-,-,-,:;		
1	1	null
2	2	47
3	2	51
⋮	⋮	⋮
n	n	n

3.14.6.6 Bounding rectangle tables. Bounding rectangle tables are present when an edge or face primitive table is present. Each edge and face primitive table in the TADS database has a corresponding edge or face bounding rectangle table (EBR or FBR, respectively). The records in this table are in one-to-one correspondence with the respective edge or face primitive table and provide for rapid retrieval of the spatial extent of a primitive. Examples of the bounding rectangle tables in the TADS database are provided in TABLE 27.

3.15 Naming conventions. TABLE 28 provides the naming conventions for the table extensions or table names for the following VPF tables: feature table extensions, primitive tables, thematic index extensions, spatial index files, and variable-length index extensions.

TABLE 27. Format and example of content for bounding rectangle tables (FBR or EBR).

{Header Length}L; Bounding Rectangle Table;-; ID=I,1,P,Row Identifier,-,-,-,: XMIN=F,1,N,Minimum X Coordinate,-,-,-,: YMIN=F,1,N,Minimum Y Coordinate,-,-,-,: XMAX=F,1,N,Maximum X Coordinate,-,-,-,: YMAX=F,1,N,Maximum Y Coordinate,-,-,-,:;				
1	null[1]	null[1]	null[1]	null[1]
2	-76.333359	36.999451	-76.331215	36.999981
3	-76.333359	36.994431	-76.321991	36.999981
⋮	⋮	⋮	⋮	⋮
n	n	n	n	n

NOTE:

1. For the face bounding rectangle table (FBR), the values for face 1 bounds are null.

TABLE 28. Naming conventions for TADS tables and files.

Table or File Type	Area	Line	Point	Node
Feature Table	AFT	LFT	PFT	PFT
Primitive Table	FAC	EDG	END	CND
Thematic Index	ATI	LTI	PTI	PTI
Spatial Index	FSI	ESI	NSI	CSI
Join Table	AJT	LJT	-	-
Variable-length Index	AFX	LFX	PFX	PFX

3.16 CD-ROM labeling and packaging. CD-ROM labeling, labeling on the cardboard sleeve, or jewel case liner/information booklet, as applicable, shall be in accordance with DMA PI 813-102, Guidelines for Labeling The Defense Mapping Agency's CD-ROMs, and Printing and Finishing of Jewel Case Liners/Cardboard Sleeves, and Information Booklets. Method of packaging (cardboard sleeve or jewel case) shall be as specified in the contract (see 5.1).

3.16.1 CD labeling. Labeling of the VITD CDs shall be in accordance with DMA PI 813-102 (therein see Figure 2 for unclassified VITDs or Figure 3 for classified VITDs).

3.16.1.1 Specific VITD labeling items.

a. Product Logo: VITD CDs shall show the VPF logo.

b. Product Description: Vector Product Interim Terrain Data (VITD)

c. Series: VITD

d. Item: The DMA item name/number.

e. Edition: Three digit edition number with left filled zeroes

f. National Stock Number: Assigned as per MIL-STD-2414.

3.16.1.2 Volume identifier. This should be identical to the eleven characters of the Volume Identifier (first eleven characters of ISO 9660 Volume Identifier (32 characters available)) written on the header of the disk (see MIL-HDBK-9660).

3.16.2 Information booklet. Information booklets shall be provided for VITD CDs. Labeling of the VITD information booklet covers shall be in accordance with DMA PI 813-102. When used in conjunction with the jewel case, the front cover of the information booklet also serves as the front cover of the case (therein see Figure 6 for unclassified VITDs or Figure 8 for classified VITDs).

3.16.2.1 Information booklet VITD specific items. All information booklet VITD specific items are the same as those shown on the CD, see 3.16.1.1.

3.16.2.2 Information booklet text. The interior pages of the information booklet shall contain the following statements (note that type should be such that all fit within the two inner surfaces of the booklet):

1. Introduction: VITD is a vector-based digital product that portrays selected military geographic information containing features of tactical military significance as defined in the Tactical Terrain Analysis Data Base (TTADB) specification, MIL-T-89304.

2. Purpose: VITD is designed to supplement the information shown on or contained within the Topographic Line Map products or files. VITD supports tactical military and Geographic Information Systems (GIS) applications for selected geographic areas; and as such, it provides terrain analysis information that is critical to planning and executing joint operations involving close air support missions, logistical operations, and land combat. Through synthesization of Tactical Decision Aids (TDAs), VITD will support such diverse tasks as terrain visualization, mobility/counter-mobility planning, site/route selection, reconnaissance planning, and communication planning. This vector product is used with Digital Terrain Elevation Data (DTED) in many terrain analysis functions.

3. Specifications and Standards: This VITD Compact Disc - Read Only Memory (CD-ROM) was produced under DoD Specification MIL-PRF-89040A, Performance Specification Vector Product Interim Terrain Data (VITD), (date TBD). It is formatted as specified in DoD Standard, MIL-STD-2407, Vector Product Format (VPF) and coded as per the Digital Geographic Information Exchange Standard (DIGEST), Part 4, Feature and Attribute Coding Catalogue (FACC).

3. Datum and Projection:
Horizontal datum: World Geodetic System 1984 (WGS 84).
Vertical datum: Mean Sea Level.
Projection: Not Applicable.

4. VITD Content: VITD is primarily produced from Interim Terrain Data (ITD, MIL-I-89014) product files covering 15 or 30 minute cells. These ITD files are equivalent to the feature and attribute content of the 1:50,000 and 100,000 scale TTADB hardcopy overlays. All these products are individually organized into single subject thematic overlays, files, or layers/coverages consisting of Surface Configuration (Slope), Vegetation, Surface Materials (Soils), Surface Drainage, Transportation (ITD and VITD have enhanced road networks), and Obstacles. Thus, VITD feature and attribute content is consistent with associated hardcopy TTADB products.

5. Comments and Questions: For questions concerning this or other DMA products or services, please telephone the DMA Customer Help Desk: 1-800-455-0899, Commercial 314-260-1236, or DSN 490-1236, or write: Director Defense Mapping Agency, ATTN: ATC, 8613 Lee Highway, Fairfax, VA 22031-2137.

3.16.3 Jewel case liner (back cover of case). Labeling of the VITD jewel case liner shall be in accordance with DMA PI 813-102 (therein see Figure 7 for unclassified VITDs or Figure 9 for classified VITDs).

3.16.4 Cardboard sleeve mailer. If a cardboard mailing sleeve is specified in the contract, it shall be labeled in accordance with DMA PI 813-102 (therein see Figure 11 for unclassified VITDs or Figure 12 for classified VITDs).

4. VERIFICATION

4.1 Classification of inspections. The inspection requirements specified herein are classified as follows:

a. First article inspection (see 4.2).

b. Conformance inspection (see 4.3).

4.2 First article inspection. When a first article inspection is required (see 3.1), the product shall be examined as specified in 4.3.1, and tested as specified in 4.3.2.

4.3 Conformance inspection. Quality conformance inspection shall include the examination of 4.3.1 and the tests of 4.3.2.

4.3.1 Examination. The database shall be examined for compliance with the requirements specified in section 3. Unless a waiver has been granted, non-compliance with any of the specified requirements shall constitute cause for rejection.

4.3.2 Tests. A sample determined by the contracting officer shall be read back after generation to ensure all files have been properly transferred.

4.4 Government furnished material. The contractor shall not duplicate, copy, or otherwise reproduce the MC&G property for purposes other than those necessary for performance of the contract.

4.5 Government property surplus. At the completion of performance of the contract, the contractor, as directed by the contracting officer, shall either destroy or return to the Government all government-furnished MC&G property not consumed in the performance of the contract.

5. PACKAGING

5.1 Packaging. For acquisition purposes, packaging requirements shall be as specified in the contract or order (See 6.2). When actual packaging of material is to be performed by DoD personnel, these personnel need to contact the responsible packaging activity to ascertain requisite packaging requirements. Packaging requirements are maintained by the Inventory Control Point's packaging activity within the Military Department or Defense Agency, or within the Military Department's System Command. Packaging data retrieval is available from the managing Military Department's or Defense Agency's automated packaging files, CD-ROM products, or by contacting the responsible packaging activity.

5.2 Marking. Unless otherwise specified (See 6.2), marking shall be in accordance with MIL-STD-129.

6. NOTES

(This section contains information of a general or explanatory nature that may be helpful, but is not mandatory.)

6.1 Intended use.

6.1.1 General usage. The VITD is a product developed to satisfy the armed services short and mid-term requirements for digital terrain analysis data on CD-ROM to support tactical military and C^3I GIS systems, emphasizing use among ground forces.

6.1.2 Analysis limitation. The analytical use of VITD data at a scale greater than 1:50,000 may be limited as the result of source material used in compilation.

6.2 Acquisition requirements. Acquisition documents must specify the following:

a. Title, number, and date of this specification.

b. Issue of the DoDISS to be cited in the solicitation, and if required, the specific issue of individual documents referenced (see 2.2.1, 2.2.2, and 2.3).

c. When a first article is required (see 3.1 and 4.2).

d. Packaging requirements (see 5.1).

6.3 Supersession. These specifications supersede the Performance Specifications for the Vector Interim Terrain Data (VITD) product, MIL-PRF-89040, 8 May 1995.

6.4 Definitions.

6.4.1 TTADB. The Tactical Terrain Analysis Data Base (TTADB) is a 1:50,000 scale geographic information system type data base consisting of a set of selected single subject thematic terrain information overlays used to satisfy tactical military requirements. Data on the physical, biological, and cultural features of the Earth's surface is presented in a hard copy cartographic format.

6.4.2 PTADB. The Planning Terrain Analysis Data Base (PTADB) is a 1:250,000 scale geographic information system type data base consisting of a set of selected single subject thematic terrain information overlays used to satisfy planning military requirements. Data on the physical, biological, and cultural features of the Earth's surface is presented in a hard copy cartographic format.

6.4.3 Abbreviations and acronyms.

ABS	Absolute
ACC	Accuracy Category
AFT	Area Feature Table
AFX	Area Feature Variable-length Table
AJT	Area Join Table
ANSI	American National Standards Institute
ASCII	American Standard Code for Information Interchange
ATI	Area Thematic Index
BCC	Bypass Condition Category
BGL	Bank Gradient Left
BGR	Bank Gradient Right
BHL	Bank Height Left
BHR	Bank Height Right
BRN	Bridge Reference Number
BUD	Brush/Undergrowth Density Code
BVL	Bank Vegetation Left
BVR	Bank Vegetation Right
C^3I	Command, Control, Communications, and Intelligence
CAT	Coverage Attribute (Description) Table
CCXXXXXX	Directory File
CD-ROM	Compact Disc-Read Only Memory
CHAR	Character
CND	Connected Node Table
CSI	Connected Node Spatial Index
CTL	Cumulative Track Length
DESCR	Feature Class Description
DGIWG	Digital Geographic Information Working Group
DHT	Database Header Table
DIGEST	Digital Geographic Information Exchange Standard
DMA	Defense Mapping Agency
DMAB	DMA Bethesda
DMAS	DMA St. Louis
DMT	Density Measure
DoD	Department of Defense
DoDISS	Department of Defense Index of Specifications and Standards
DOS	Disk Operating System
DQT	Data Quality Table
DQX	Data Quality Index
DSHG	Data Set History Group
DSI	Data Set Identification
DSIG	Data Set Identification Group
DSIN	Data Set Identification Number
DSPG	Data Set Parameter Group
DSSG	Data Set Security Group
EBR	Edge Bounding Rectangle
EBX	Edge Variable-length Index File

ECMA	European Computer Manufacturers Association
EDG	Edge Table
END	Entity Node Table
ESI	Edge Spatial Index
EXS	Existence Category
FAC	Face Table
FACC	Feature and Attribute Coding Catalogue
FBR	Face Bounding Rectangle
FC	Feature Class
FCA	Feature Class Attribute Table
FCLASS	Feature Class Name
FCO	Feature Configuration
FCS	Feature Class Schema Table
FCX	Variable Length Text File for FCA
FCZ	Feature Class Schema Table Variable-length Index
FEA	Feature
FIPS PUB	Federal Information Processing Standards Publication
FIT	Feature Index Table
FSI	Face Spatial Index
FTC	Farming Type Category
FTI	Feature Index Table Index
F_CODE	FACC Feature Code
GEOREF	World Geographic Reference System
GIS	Geographic Information System
GRT	Geographic Reference Table
GSC	Ground Slope Category
HGT	Height Above Surface Level
HYC	Hydrological Category
ID	Identifier
IEEE	Institute of Electrical and Electronics Engineers
INT	Integer
ISO	International Organization for Standardization
ITD	Interim Terrain Data
JTI	Join Table Index
LAT	Library Attribute (or Extent) Table
LC1	Load Class Type 1
LC2	Load Class Type 2
LC3	Load Class Type 3
LC4	Load Class Type 4
LEN	Length/Diameter
LFT	Line Feature Table
LFX	Line Feature Variable-length Index
LHT	Library Header Table
LINAGE.DOC	Lineage Narrative Table
LJT	Line Join Table
LOC	Location Category
LTI	Line Thematic Index

MBR	Minimum Bounding Rectangle
MC&G	Mapping, Charting, and Geodesy
MCC	Material Composition Category
MCGT	Mapping, Charting and Geodesy Technology
MSL	Mean Sea Level
NMAS	National Map Accuracy Standard
NOS	Number of Spans
NSI	Entity Node Spatial Index
OBS	Obstacles (coverage name)
OHC	Overhead Clearance Category
PC	Personal Computer
PFT	Point Feature Table
PFX	Point Feature Variable-length Index
PHT	Predominant Height
PITD	Planning Interim Terrain Data
PRIM	Primitive
PTABD	Planning Terrain Analysis Data Base
PTI	Point or Node Thematic Index
PTR	Pointer
QA	Quality Assurance
QC	Quality Control
QSTAGs	Quadripartite Standardization Agreements
REL	Point to Point (Relative)
RNG	Ring Table
RRA	Railroad Power Source
RRC	Railroad Category
RSA	Railroad Spur/Siding Attribute
RST	Road/Runway Surface Type
SDC	Soil Depth Category
SDR	Surface Drainage (coverage name)
SDS	Stem Diameter Size
SGC	Gradient/Slope
SLF	Standard Linear Format
SLP	Slope/Surface Configuration (coverage name)
SMC	Soil/Surface Materials (coverage name)
SRD	Surface Roughness Description
STANAGs	NATO International Standardization Agreements
STP	Soil Type
SWC	Soil Wetness Condition
TADS	Terrain Analysis Data Base (VITD database name)
TBD	To be determined
TBR	To be resolved
TID	Tidal/Non-tidal Category
TLM	Topographic Line Map
TRB	Transportation Bridge
TRD	Transportation Road
TRN	Transportation (coverage name)
TRR	Transportation Railroad

TSC	Tree Spacing Category
TTADB	Tactical Terrain Analysis Data Base
TUC	Transportation Use Category
TXT	Text Attribute
TYPE	Feature Type
UBC	Underbridge Clearance Category
USE	Usage
VDT	Value Description Table
VEG	Vegetation (coverage name)
VEG	Vegetation Characteristics
VITD	Vector Product Interim Terrain Data (VITD product name)
VPF	Vector Product Format
WD1	Minimum Travelled Way Width
WD3	Military Gap Width
WD5	Width Top
WDA	Water Depth Average
WGS	World Geodetic System
WID	Width
WTC	Weather Type Category
WVA	Water Velocity Average
XMAX	Easternmost Longitude
XMIN	Westernmost Longitude
YGL	Length of Greater Precision
YMAX	Northernmost Latitude
YMIN	Southernmost Latitude

6.4.4 Actual definitions. For actual definitions refer to MIL-STD-2407, section 3. For illustrations and more definitive definitions of terrain analysis features, attributes, and values refer to the TTADB specification, MIL-T-89304.

6.5 Subject term (keyword) listing. This paragraph contains an alphabetical listing of subject terms (key words) that allow for identification of the document during retrieval searches. Note subject terms do not repeat words from title of this document, "Performance Specification, Vector Product Interim Terrain Data (VITD)":

Airfields
Bridges/Bridge Spans
Digital Geographic Information Exchange Standard (DIGEST)
Feature and Attribute Coding Catalogue (FACC)
Geographic Information System (GIS)
Interim Terrain Data (ITD)
Obstacles
Open Water

Planning Terrain Analysis Data Base (PTADB)
Planning Terrain Interim Data (PITD
Railroads
Roads
Runways
Slope/Surface Configuration
Soil/Surface Materials
Streams
Surface Drainage
Tactical Terrain Analysis Data Base (TTADB)
Terrain Analysis (TA)
Thematic Layers
Transportation
Tunnels
Vector Product Format (VPF)
Vegetation

6.6 Standardization agreements.

This section is not applicable to this specification.

6.7 Changes from previous issue. Marginal notations are not used in this revision to identify changes with respect to the previous issue due to the extent of the changes.

6.8 Classification and special handling of thematic files.

a. The classification of the final VITD files will be determined by the appropriate security section responsible for the final classification. The lowest possible classification of the final product is desired.

b. Even though the final thematic files might be unclassified, a handling caveat could be required. Some NATO and other countries have mapping and other agreements which dictate the handling of materials produced over their country. Security elements should check for caveat requirements at the beginning of each project.

6.9 DMA customer help desk. For questions concerning this or other DMA products, services, or specifications, please telephone the DMA Customer Help Desk at 1-800-455-0899, Commercial 314-260-1236, or DSN 490-1236.

TERRAIN ANALYSIS DATA SET (TADS) DATA DICTIONARY

A.1 SCOPE

A.1.1 Scope. This appendix contains some examples of the records that may be contained in the TADS database-level tables. This appendix is a mandatory part of the specification. The information contained herein is intended for compliance.

A.2 APPLICABLE DOCUMENTS

A.2.1 DoD specifications.

a. Interim Terrain Data (ITD) / Planning Interim Terrain Data (PITD), MIL-I-89014.

b. Tactical Terrain Analysis Data base (TTADB), Scale 1:50,000, MIL-T-89304.

A.2.2 DoD standards. Vector Product Format, MIL-STD-2407.

A.2.3 Federal information processing standards. Countries, Dependencies, Areas of Special Sovereignty, and their Principal Administrative Divisions, FIPS PUB 10-3.

A.2.4 Other government documents. Digital Geographic Information Exchange Standard (DIGEST), Part 4, Feature and Attribute Coding Catalogue.

A.3 TADS DATA DICTIONARY ORGANIZATION

A.3.1 Data dictionary organization.

a. The data provided in this appendix are organized according to VPF structure levels. Each TADS database will have its own set of files and tables. The TADS database-level tables appear first and are described in Section A.4. The information provided in database-level tables applies to the entire TADS database. A TADS database will contain multiple libraries. Each library is the equivalent area of an existing ITD cell. Section A.5 contains the library-level tables and VPF coverages for the data libraries. Section A.6 contains a listing of the FACC feature and attribute codes with descriptions, feature tables, and feature schema tables representing each coverage. Section A.7 contains a list of attribute codes, valid attribute ranges, and their null and unknown values for all TADS attributes.

b. In this data dictionary, a brief description of each feature table is provided, followed by the appropriate FACC feature and attribute codes for that table. Definitions of both feature and attribute codes are documented after the appropriate character value description tables. All VPF tables consist of a header that

is followed by the actual record contents. This appendix contains some examples of the records that may be contained in actual tables. The data structure and contents for both the metadata tables and feature tables that may be present within a coverage are defined in this appendix. Tables not presented in this appendix appear in the main document section of this military specification, specifically, the format and structure of index files and primitive tables.

A.3.2 Notes regarding table format.

a. The header portion of each table (top half of each illustration) defines the entries required for the VPF table header. The content portion (bottom half) of each table defines the record entries for the data fields.

b. A semicolon (;) is a separator for the four components of a header.

c. The colon (:) indicates the end of a column definition.

d. Carriage returns are embedded in the text for readability only. All header information shall be a continuous string of characters with no carriage returns.

e. For more information on the format of a VPF table, see Section 3.12.

f. For tables with a large number of columns and have only one record entry (i.e., DHT, LHT, GRT), the backslash character (\) at the end of a line in the data records section is used to indicate that the record entry is continued for each column for that record; no carriage returns are implied. This format permits the data records for a large number of columns to be represented so that they may fit on a page of this document.

A.4 TADS DATABASE-LEVEL VPF TABLES AND CONTENTS

A.4.1 TADS VPF table structure and content. The structure and content of each VPF table in the TADS database directory are provided in this section.

A.4.2 Database-level metadata tables. The high resolution TADS database directory file name is the first file to appear on a CD-ROM followed by database-level metadata files as follows:

TADS[1]	database directory file
LAT	library attribute (extent) table
DHT	database header table

NOTE:
1. Actual database names may vary based on geographic area and number of libraries per database.

A.4.2.1 Library attribute (extent) table (LAT). The library attribute table contains the name and geographic extent for each library in the database (TABLE 29). In TADS, each library will correspond to the existing ITD cell. The library name consists of eight characters. The first two characters relate to the country code as referenced in FIPS PUB 10-3 and the last six characters equate to the map sheet referenced in the Data Set Identification Number, DSI Group, DSI Record of MIL-I-89014. In some countries duplicate sheet numbers may exist, such as in the United States. In this case the country has different series numbers that divide the country in half. In each case the third character will either be "E" for East or "W" for West, followed by the remaining five digit code. The DSIN is right-justified. For example, the Killeen, Texas ITD cell would be represented as library name "USW64462". Here "US" represents the United States and "W" represents the western half of the US, and 64462 represents the Killeen 1:50000 scale topographic map sheet 6446II that defines the boundary of the ITD cell. For situations where the use of "E" for East or "W" for West is not appropriate, an "N" for neither will be used. If any Roman numerals are used, these are to be converted to Arabic numbers (e.g., IV = 4, XII = 12). If ITD is used, longitude and latitude coordinates may be derived from the Data Set Parameter Group (DSPG) of the DSI Record.

TABLE 29. Format and content for library attribute (extent) table.

{Header Length}L; Library Attribute (Extent) Table;-; ID=I,1,P,Row Identifier,-,-,-,: LIBRARY_NAME=T,8,N,Library name,-,-,-,: XMIN=F,1,N,Westernmost longitude,-,-,-,: YMIN=F,1,N,Southernmost latitude,-,-,-,: XMAX=F,1,N,Easternmost longitude,-,-,-,: YMAX=F,1,N,Northernmost latitude,-,-,-,:;

1	USW64461[1]	-97.750000	31.250000	-97.500000	31.500000
2	USW64462[1]	-97.750000	31.000000	-97.500000	31.250000
3	USW64463[1]	-98.000000	31.000000	-97.750000	31.250000
4	USW64464[1]	-98.000000	31.250000	-97.750000	31.500000
⋮	⋮	⋮	⋮	⋮	⋮
n	n	n	n	n	n

NOTE:

1. The names and extent of the TADS libraries in the database will vary by geographic area and be included as part of the source package.

A.4.2.2 Database header table. The database header table (TABLE 30) contains information that defines database content and security.

TABLE 30. Format and content for database header table (DHT).

```
{Header Length}L;
Database Header Table;-;
ID=I,1,P,Row Identifier,-,-,-,:
VPF_VERSION=T,10,N,VPF version number,-,-,-,:
DATABASE_NAME=T,8,N,Directory name of this database,-,-,-,:
DATABASE_DESC=T,100,N,Description of this database,-,-,-,:
MEDIA_STANDARD=T,20,N,Media Standard,-,-,-,:
ORIGINATOR=T,50,N,Producer of this database,-,-,-,:
ADDRESSEE=T,100,N,Address of the producer,-,-,-,:
MEDIA_VOLUMES=T,1,N,Number of Volumes in this database,-,-,-,:
SEQ_NUMBERS=T,1,N,The Sequential Number(s) in this
database,-,-,-,:
NUM_DATA_SETS=T,1,N,Number of Libraries,-,-,-,:
SECURITY_CLASS=T,1,N,Security Classification,-,-,-,:
DOWNGRADING=T,3,N,Downgrading,-,-,-,:
DOWNGRADE_DATE=D,1,N,Date,-,-,-,:
RELEASABILITY=T,20,N,Releasability restrictions of data,-,-,-,:
OTHER_STD_NAME=T,50,N,Description of other data standards
used,-,-,-,:
OTHER_STD_DATE=D,1,N,Date,-,-,-,:
OTHER_STD_VER=T,10,N,Version number of other standard,-,-,-,:
TRANSMITTAL_ID=T,1,N,Unique Transmittal Identifier,-,-,-,:
EDITION_NUMBER=T,10,N,Edition Number of this database,-,-,-,:
EDITION_DATE=D,1,N,Date of edition,-,-,-,:;
```

```
1\
1.0\
TADS\
TERRAIN ANALYSIS DATA SET: a digital product designed to support tactical
military GIS requirements\
ISO 9660\
DEFENSE MAPPING AGENCY/ACQUISITION AND TECHNOLOGY\ ,
HEADQUARTERS DEFENSE MAPPING AGENCY ATTN: ATC 8613 LEE HWY
FAIRFAX, VA  22031-2137\
1\ (TBD, for prototype default is 1)
1\ (TBD)
1\ (TBD)
VARIOUS\ (Based on geographic location of ITD cell, refer to LHT)
VARIOUS\ (Based on geographic location of ITD cell, refer to LHT)
00000000000000.\
VARIOUS\ (Based on geographic location of ITD cell)\
DIGEST PART 4 FACC FEATURE CATALOG\
19941000000000.\
1.2\
1\
1\
19931008000000. (date of database creation)
```


Printing date 3 11 14 8

A.5 TADS DATA LIBRARY

A.5.1 TADS data library structure and content.

a. The structure and content of each VPF table in a data library of the TADS database are provided in this section. All tables presented in this section apply to every data library in a TADS database. The actual record contents of the metadata tables will vary with each TADS library. Those records that vary are indicated by a footnote mark.

b. Each TADS library is represented as a directory file. The number of TADS libraries are TBD. A library will represent the contents of an existing ITD cell, which is generally the area bounded by the corresponding map sheet.

A.5.2 Library-level metadata tables. Each TADS data library shall contain the following metadata tables at the library level:

CCXXXXXX[1]	directory file
CAT	coverage attribute (description) table
DQT	data quality table
DQX	data quality index file
GRT	geographic reference table
LHT	library header table
LINEAGE.DOC	lineage narrative table

NOTE: 1. Representative directory name for a TADS library.

A.5.2.1 Coverage attribute (description) table. The following CAT shall be present in every TADS data library. TABLE 31 depicts all of the possible records that may be present in the CAT.

TABLE 31. Format and sample content for coverage attribute (description) table (CAT).

{Header Length}L; Coverage Attribute (Description) Table;-; ID=I,1,P,Row Identifier,-,-,-,: COVERAGE_NAME[1]=T,8,N,Coverage name,-,-,-,: DESCRIPTION=T,50,N,Coverage description,-,-,-,: LEVEL[2]=I,1,N,Topology level,-,-,-,:;			
1	OBS	Obstacles	3
2	SLP	Slope/Surface Configuration	3
3	SMC	Soils/Surface Material	3
4	SDR	Surface Drainage	3
5	TRN	Transportation	3
6	VEG	Vegetation	3

NOTES:

1. This table depicts all possible TADS coverages that may be present in a library. Presence of these coverages will vary with data availability. If a TADS library does not contain any data for a particular coverage, then the record describing that coverage will be deleted.
2. The topology level for all coverages in the TADS data library is level 3.

A.5.2.2 Library header table. The following LHT shall be present in every TADS library. The format and sample content of the library header table for each library is presented in TABLE 32. The record content of this table will vary for each TADS library. When ITD is used, some of the information will be derived from the Data Set Identification Group (DSIG) and Data Set Security Group (DSSG) of the DSI Record.

TABLE 32. Format and content for example TADS library header table (LHT).

{Header Length}L; Library Header Table;-; ID=I,1,P,Row Identifier,-,-,-,: PRODUCT_TYPE=T,12,N,Product Type,-,-,-,: LIBRARY_NAME=T,12,N,Name,-,-,-,: DESCRIPTION=T,100,N,Description of the library,-,-,-,: DATA_STRUCT_CODE=T,1,N,Data Structure Code,-,-,-,: SCALE=I,1,N,Scale of the library,-,-,-,: SOURCE_SERIES=T,15,N,Series number for ITD,-,-,-,: SOURCE_ID=T,30,N,Sheet number for ITD/TTADB cell,-,-,-,: SOURCE_EDITION=T,20,N,Edition number of ITD,-,-,-,: SOURCE_NAME=T,100,Name of library source,-,-,-,: SOURCE_DATE=D,1,N,Source Date,-,-,-,: SECURITY_CLASS=T,1,N,Security Classification,-,-,-,: DOWNGRADING=T,3,N,Downgrading,-,-,-,: DOWNGRADING_DATE=D,1,N,Date,-,-,-,: RELEASABILITY=T,20,N,Releasability,-,-,-,:;
1\ TADS\ USW64462[1]\ This library contains digital data collected from the existing ITD cell.\ 8\ 50000\ N/A\[Null] V782J064462\ (for ITD use the Data Set ID of the DSI Group, left justified) N/A\[Null] Interim Terrain Data\ 00000000000000.\ (For ITD use compilation date, only YYMM available) U,R,C,S,T\ (Dependent upon geographic location U-Unclassified,R-Restricted, or For Official Use Only, C-CONFIDENTIAL, S-SECRET, T-TOP SECRET) YES or NO\ (Depending upon classification OADR-YES, if not NO) 00000000000000.\ (for ITD derived only YYMMDD format is available) VARIOUS\ (dependent upon geographic location)

NOTE:

1. Replace with appropriate TADS record content for each library, CCXXXXXX.

A.5.2.3 Geographic reference table. The following GRT shall be present in every TADS library. The record content of this table will vary for each TADS library. The format and sample content of the library header table for each library is presented in TABLE 33.

TABLE 33. Format and sample content for a TADS geographic reference table (GRT).

```
{Header Length}L;
Geographic Reference Table;-;
ID=I,1,P,Row Identifier,-,-,-,:
DATA_TYPE=T,3,N,Data Type,-,-,-,:
UNITS=T,3,N,Units,-,-,-,:
ELLIPSOID_NAME=T,15,N,Ellipsoid Name,-,-,-,:
ELLIPSOID_DETAIL=T,50,N,Ellipsoid Details,-,-,-,:
VERT_DATUM_NAME=T,15,N,Datum Vertical Reference,-,-,-,:
VERT_DATUM_CODE=T,3,N,Vertical Datum Code,-,-,-,:
SOUND_DATUM_NAME=T,15,N,Sounding Datum,-,-,-,:
SOUND_DATUM_CODE=T,3,N,Sounding Datum Code,-,-,-,:
GEO_DATUM_NAME=T,15,N,Datum Geodetic Name,-,-,-,:
GEO_DATUM_CODE=T,3,N,Datum Geodetic Code,-,-,-,:
PROJECTION_NAME=T,20,N,Projection Name,-,-,-,:;
```

```
1\
GEO\
DEG\
WGS 84\
A=6378137 B=6356752 Meters\
MEAN SEA LEVEL\
015\
N/A\  [Null]
N/A\  [Null]
WGS84\
WGE\
N/A\  [Null]
```

A.5.2.3.1 Table 33 parameters. An explanation of each of the parameters in Table 33 is as follows:

a. ID = Row identifier required for most tables.

b. DATA_TYPE = The type of data in the library GEO indicates geographic coordinate data, as opposed to DIG for digitized graphic data (machine/table coordinates), and MAP for map projection coordinates.

c. UNITS = Unit of measure of the library, for this specification this is interpreted as units of measurement for coordinate of the library, which is degrees, decimal degrees.

d. ELLIPSOID_NAME = Name of the ellipsoid of the library, all data should be in World Geodetic System 1984.

e. ELLIPSOID_DETAILS = Details about the ellipsoid includes the ellipsoid code as referenced in MIL-STD-2407, appendix G.

f. VERT_DATUM_NAME = Name of the vertical datum.

g. VERT_DATUM_CODE = Code of the vertical datum, refer to MIL-STD-2407.

h. SOUND_DATUM_NAME = Name of the sounding datum, not used in this specification.

i. SOUND_DATUM_CODE = Code of the sounding datum.

j. GEO_DATUM_NAME = Name of the geodetic datum, WGS-84 is the datum to be used, unless a DMA conversion from the local datum does not exist, in which case, the local datum will be referenced.

k. GEO_DATUM_CODE = Code of the geodetic datum; refer to MIL-STD-2407.

l. PROJECTION_NAME = Name of projection. Since geographic coordinates are required, this record is not applicable.

A.5.2.4 Data quality table. The following data quality table shall be present at the library-level for every TADS library. The record content of this table may vary for each TADS library. The format and sample content of the DQT for each library is presented in TABLE 34. Some of this information will be converted from the Data Set History Group (DSHG) of the DSI Record in MIL-I-89014.

TABLE 34. Format and content for example data quality table (DQT).

```
{Header Length}L;
Library Data Quality Table;-;
ID=I,1,P,Row Identifier,-,-,-,:
VPF_LEVEL=T,8,N,VPF Level,-,-,-,:
VPF_LEVEL_NAME[1]=T,8,N,Name of VPF Level,-,-,-,:
FEATURE_COMPLETE=T,*,N,Feature Completeness Percent,-,-,-,:
ATTRIB_COMPLETE=T,*,N,Attribute Completeness Percent,-,-,-,:
LOGICAL_CONSIST=T,*,N,Logical Consistency,-,-,-,:
EDITION_NUM=T,8,N,Edition Number,-,-,-,:
CREATION_DATE=D,1,N,Creation Date,-,-,-,:
REVISION_DATE=D,1,N,Revision Date,-,-,-,:
SPEC_NAME=T,*,N,Product Specification Name,-,-,-,:
SPEC_DATE=D,1,N,Product Specification Date,-,-,-,:
EARLIEST_SOURCE=D,1,N,Date of Earliest Source,-,-,-,:
LATEST_SOURCE=D,1,N,Date of Latest Source,-,-,-,:
COLLECTION_SPEC=T,*,N,Collection Specification Name,-,-,-,:
SOURCE_FILE_NAME=T,12,N,Included Source File Name,-,-,-,:
ABS_HORIZ_ACC=T,*,N,Absolute Horizontal Accuracy of VPF
Level,-,-,-,:
ABS_HORIZ_UNITS=T,20,N,Unit of Measure for Absolute Horizontal Accuracy,-,-
,-,:
```

TABLE 34. Format and content for example data quality table (DQT) - Continued.

ABS_VERT_ACC=T,*,N,Absolute Vertical Accuracy of VPF Level,-,-,-,:
ABS_VERT_UNITS=T,20,N,Unit of Measure for Absolute Vertical Accuracy,-,-,-,:
REL_HORIZ_ACC=T,*,N,Point to Point Horizontal Accuracy of VPF Level,-,-,-,:
REL_HORIZ_UNITS=T,20,N,Unit of Measure for Point to Point Horizontal Accuracy,-,-,-,:
REL_VERT_ACC=T,*,N,Point to Point Vertical Accuracy of VPF Level,-,-,-,:
REL_VERT_UNITS=T,20,N,Unit of Measure for Point to Point Vertical Accuracy,-,-,-,:
COMMENTS=T,*,N,Miscellaneous Comments,-,-,-,:;
1\
LIBRARY\ (backslash use as line separator)
CCXXXXXX[1]\
Unknown percent Data collected from best available sources.\
Unknown percent Refer to data dictionary of specification for unit of measurement for mensurative attributes.\
Topology is consistent with those relationships established in this specification, cardinality for all features is one-to-one, except for transportation line and area features, surface drainage line features, and obstacles line features, for node bridge and bridge spans many to one may exist. This is dependent on how the data was previously captured in the SLF data structure.\
1\ (Edition will begin at 1, and increase as editions are updated.)
00000000000000.\
00000000000000.\
Performance Specification MIL-PER 89040 VITD Vector Product Interim Terrain Data\
19950508000000.\
00000000000000.\(For ITD only YYMM format of the DSHG is available)
00000000000000.\(For ITD only YYMM format of the DSHG is available)
Military Specification MIL-I-89014 Interim Terrain Data(ITD) Planning Interim Terrain Data 30 November 1990\
N/A\
0-length VLT
N/A\
0-length VLT
N/A\
0-length VLT
N/A\
0-length VLT
N/A\
Producer is CCCCCCCC Digitizing System is CCCCCCCCCC Processing System is CCCCCCCCCC.\ (For ITD comments include producer code 8 A/N characters either 'US090000' for DMAB or 'US090078' for DMAS, digitizing system is 10 A/N characters, and processing system is 10 A/N characters all from the DSHG of DSI Record.)

NOTE:

1. Replace with appropriate TADS library name for each appropriate library.

A.5.2.5 Lineage narrative table. This table is an optional table and is not required for all libraries. Information regarding specialized sources that were utilized in the compilation of the product is contained within this table. Information about the sources can only be associated at the level of the security classification of the final product. The entire source package should not be contained within this table, only those sources that relate to currency or ground truth to assist the user's evaluation of the data. An example of the format and content is presented in TABLE 35. This table can be used for stating mismatches between VITD sheets due to different source dates.

TABLE 35. Format and content of the lineage documentation table (LINEAGE.DOC).

{Header Length}L; Lineage Documentation Table;-; ID=I,1,P,Row Identifier,-,-,-,: TEXT=T,80,N,Text information,-,-,-,:;	
1	For this library photo sources used in data collection were
2	flown on July 1990. For TRN coverage a road and bridge map
3	V73264462 dated Nov. 1988 was used for the Mil Load classes.
4	For SMC coverage, a 1920 Dutch soil survey containing major
5	soil types with actual location of testholes and drawings of
6	the soil profiles, etc.

A.6 FEATURES AND ATTRIBUTES OF THE DATA LIBRARY

A.6.1 Data dictionary content and consistency with ITD. The data dictionary contains a description of TADS libraries, the name and description of each attribute, attribute values, and explanatory notes for each feature table. The data content is consistent with the ITD features contained within MIL-I-89014.

A.6.2 Data dictionary organization. The coverages presented in the library are Obstacles (OBS), Slope/Surface Configuration (SLP), Soil/Surface Materials (SMC), Surface Drainage (SDR), Transportation (TRN), and Vegetation (VEG). For the contents of the CCXXXXXX[1] library refer to TABLE 36. A brief description is provided for each coverage. The coverage description is followed by value description tables and a schema table for each feature class. Area, line, point, and node feature tables (AFT, LFT, and PFT), when present, appear in that order. The schema tables define the attribute names for that feature class, the attribute descriptions, and the field types. The field type provides the field definition and the field size required to store the attribute data. Join tables are implemented for compound relationships, one-to-many, for selective transportation, obstacles, and surface

drainage classes. These explicit relationships are defined only if the features were collected in that manner.

NOTE:
1. This is a representative directory name for a TADS library.

TABLE 36. CCXXXXXXX[1] library feature and primitive tables by coverage.

Thematic Layer	Coverage Name	Feature Tables(s)	Primitive Tables	Appendix Section
Obstacles	OBS	OBSAREA.AFT OBSLINE.LFT OBSNODE.PFT	FAC RNG EDG CND	A.6.2.1
Slope/Surface Configuration	SLP	SLPAREA.AFT SLWAREA.AFT	FAC RNG EDG CND	A.6.2.2
Soil/Surface Materials	SMC	SMCAREA.AFT SMWAREA.AFT	FAC RNG EDG CND	A.6.2.3
Surface Drainage	SDR	SDCAREA.AFT SDRAREA.AFT SDCLINE.LFT SDRLINE.LFT SDRPOINT.PFT SDRNODE.PFT	FAC RNG EDG END CND	A.6.2.4
Transportation	TRN	TRNAREA.AFT TRBLINE.LFT TRDLINE.LFT TRNLINE.LFT TRRLINE.LFT TRBDGND.PFT TRNNODE.PFT	FAC RNG EDG CND	A.6.2.5
Vegetation	VEG	VEGAREA.AFT VGFAREA.AFT VGWAREA.AFT	FAC RNG EDG CND	A.6.2.6

NOTE:
1. CCXXXXXX is for example only, which would be replaced by the appropriate library name.

A.6.3 (Data) library coverages.

A.6.3.1 Obstacles coverage. The Feature Class Schema (FCS) table which defines the relationships between the feature and primitives is presented in TABLE 37. Area feature tables, line feature tables, node feature tables, and Feature Class Attribute (FCA) tables are presented in TABLES 38 to 42. This coverage contains area, linear, point, and node features relating to natural

obstacles such as escarpments, depressions, and volcanic dikes, and man-made obstacles such as cuts, fills, embankments, walls, etc. A Feature join table is used for linear obstacle features, where a feature may contain multiple edge primitives. The value description tables for the obstacles coverage are provided in TABLES 43 and 44. Most of these obstacles act or function as barriers to the movement of vehicles/personnel through a particular area. Generally linear obstacles are only portrayed if their length is greater than 250 meters, have a slope >60%, and are higher than 1.5 meters (Refer to MIL-T-89304 for more information).

TABLE 37. Obstacles feature class schema table (FCS).

```
{Header Length}L;
Obstacles Feature Class Schema Table;-;
ID=I,1,P,Row Identifier,-,-,-,:
FEATURE_CLASS=T,8,N,Name of Feature Class,-,-,-,:
TABLE1=T,12,N,First Table in a Relationship,-,-,-,:
TABLE1_KEY=T,16,N,Column Name in First Table,-,-,-,:
TABLE2=T,12,N,Second Table in a Relationship,-,-,-,:
TABLE2_KEY=T,16,N,Column Name in Second Table,-,-,-,:;
```

1	OBSAREA	OBSAREA.AFT	FAC_ID	FAC	ID
2	OBSAREA	FAC	ID	OBSAREA.AFT	FAC_ID
3	OBSLINE	OBSLINE.LFT	ID	OBSLINE.LJT	OBSLINE.LFT_ID
4	OBSLINE	OBSLINE.LJT	EDG_ID	EDG	ID
5	OBSLINE	EDG	ID	OBSLINE.LJT	EDG_ID
6	OBSLINE	OBSLINE.LJT	OBSLINE.LFT_ID	OBSLINE.LFT	ID
7	OBSNODE	OBSNODE.PFT	CND_ID	CND	ID
8	OBSNODE	CND	ID	OBSNODE.PFT	CND_ID

TABLE 38. Obstacles area feature table.

```
{Header Length}L;
OBSAREA.AFT, Obstacles Area Feature Table;-;
ID=I,1,P,Row Identifier,-,-,-,:
FAC_ID=I,1,N,Face Primitive Foreign Key,-,-,-,:
F_CODE=T,5,N,FACC Feature Code,CHAR.VDT,F_CODE1.ATI,-,:
TXT=T,*,N,Text Attribute,-,-,-,:;
```

A.6.3.1.1 Obstacles area attribute definitions.

Column	Description	Value	Value Meaning	Applicable F_Code for Each Attribute Value
ID	Row Identifier	Sequential beginning with 1		
F_CODE	FACC Feature Code			
		AL060	Dragon Teeth	
		DB080	Depression	
		ZD012	Geographic Information Point	
TXT	Text Attribute			
		Zero length	Null	AL060, DB080
		VLT Character String		ZD012

TABLE 39. Obstacles line feature table.

```
{Header Length}L;
OBSLINE.LFT,Obstacles Line Feature Table;-;
ID=I,1,P,Row Identifier,-,-,-,:
F_CODE=T,5,N,FACC Feature Code,CHAR.VDT,F_CODE1.LTI,-,:
LOC=I,1,N,Location Category,INT.VDT,-,-,:
TXT=T,*,N,Text Attribute,-,-,-,:
USE=I,1,N,Usage,INT.VDT,-,-,:;
```

TABLE 40. Obstacles line join table.

```
{Header Length}L;
OBSLINE.LJT,Obstacles Line Join Table;-;
ID=I,1,P,Row Identifier,-,-,-,:
OBSLINE.LFT_ID=I,1,N,Feature Key,-,OBSLINE1.JTI,-,:
EDG_ID=I,1,N,Primitive Key,-,EDG1.JTI,-,:;
```

NOTE: This table is used to combine linear obstacles with their associated primitives as a one-to-many relationship.

A.6.3.1.2 Obstacles line attribute definitions.

Column	Description	Value	Value Meaning	Applicable F_Code for Each Attribute Value
ID	Row Identifier	Sequential beginning with 1		
F_CODE	FACC Feature Code			
		AL060	Dragon Teeth	
		AL260	Wall	
		AQ113	Pipeline/Pipe	
		BH100	Moat	
		DB010	Bluff/Cliff/Escarpment	
		DB070	Cut	
		DB090	Embankment/Fill	
		DB190	Volcanic Dike	
		EA020	Hedgerow	
		ZD012	Geographic Information Point	
LOC	Location Category			
		0	Unknown	AQ113
		8	On Ground Surface	AQ113
		25	Suspended or Elevated Above Ground or Water Surface	AQ113
		-MAXINT	Null	AL060, AL260, BH100, DB010, DB070, DB090, DB190, EA020, ZD012
TXT	Text Attribute			
		Zero length	Null	AQ113, AL060, AL260, BH100, DB010, DB070, DB090, DB190, EA020
		VLT		
		Character String		ZD012

Column	Description	Value	Value Meaning	Applicable F_Code for Each Attribute Value
USE	Usage			
		0	Unknown	DB090
		69	Levee/Dike	DB090
		139	Fill	DB090
		-MAXINT	Null	AL060, AL260, AQ113, BH100, DB010, DB070, DB190, EA020, ZD012

TABLE 41. Obstacles node feature table.

```
{Header Length}L;
OBSNODE.PFT,Obstacles Node Feature Table;-;
ID=I,1,P,Row Identifier,-,-,-,:
CND_ID=I,1,N,Connected Node Primitive Foreign Key,-,-,-,:
F_CODE=T,5,N,FACC Feature Code,CHAR.VDT,F_CODE1.PTI,-,:
TXT=T,*,N,Text Attribute,-,-,-,:;
```

A.6.3.1.3 Obstacles node attribute definitions.

Column	Description	Value	Value Meaning	Applicable F_CODE for Each Attribute Value
ID	Row Identifier	Sequential beginning with 1		
F_CODE	FACC Feature Code			
		AL195	Ramp	
		ZD012	Geographic Information Point	
TXT	Text Attribute			
		Zero length	Null	AL195
		VLT Character String		ZD012

TABLE 42. Obstacles feature class attribute table.

{Header Length}L;			
Obstacles Feature Class Attribute Table;-;			
ID=I,1,P,Row Identifier,-,-,-,:			
FCLASS=T,8,U,Feature Class Name,-,-,-,:			
TYPE=T,1,N,Feature Type,CHAR.VDT,-,-,:			
DESCR=T,*,N,Description,-,-,-,:;			
1	OBSAREA	A	Area obstacles
2	OBSLINE	L	Natural and man-made linear obstacles
3	OBSNODE	P	Crossing point and miscellaneous obstacles

Column	Description	Value	Value Meaning	Applicable Feature Class for Each Attribute Value
ID	Row Identifier	Sequential beginning with 1		
FCLASS	Feature Class Name			
		OBSAREA		
		OBSLINE		
		OBSNODE		
TYPE	Feature Type			
		A	Area Feature	OBSAREA
		L	Line Feature	OBSLINE
		P	Point/Node Feature	OBSNODE
DESCR	Description			
		Area obstacles		OBSAREA
		Natural and man-made linear obstacles		OBSLINE
		Crossing point and miscellaneous obstacles		OBSNODE

TABLE 43. Obstacles character value description table.

{Header Length}L;				
CHAR.VDT,Obstacles Character Value Description Table;-;				
ID=I,1,P,Row Identifier,-,-,-,:				
TABLE=T,12,N,Feature Class Table Name,-,-,-,:				
ATTRIBUTE=T,6,N,Attribute Name,-,-,-,:				
VALUE=T,5,N,Attribute Value,-,-,-,:				
DESCRIPTION=T,50,N,Attribute Value Description,-,-,-,:;				
1	OBSAREA.AFT	F_CODE	AL060	Dragon Teeth
2	OBSAREA.AFT	F_CODE	DB080	Depression
3	OBSAREA.AFT	F_CODE	ZD012	Geographic Information Point
4	OBSLINE.LFT	F_CODE	AL060	Dragon Teeth

TABLE 43. Obstacles character value description table - Continued.

5	OBSLINE.LFT	F_CODE	AL260	Wall
6	OBSLINE.LFT	F_CODE	AQ113	Pipeline/Pipe
7	OBSLINE.LFT	F_CODE	BH100	Moat
8	OBSLINE.LFT	F_CODE	DB010	Bluff/Cliff/Escarpment
9	OBSLINE.LFT	F_CODE	DB070	Cut
10	OBSLINE.LFT	F_CODE	DB090	Embankment/Fill
11	OBSLINE.LFT	F_CODE	DB190	Volcanic Dike
12	OBSLINE.LFT	F_CODE	EA020	Hedgerow
13	OBSLINE.LFT	F_CODE	ZD012	Geographic Information Point
14	OBSNODE.PFT	F_CODE	AL195	Ramp
15	OBSNODE.PFT	F_CODE	ZD012	Geographic Information Point
16	FCA	TYPE	A	Area Feature
17	FCA	TYPE	L	Line Feature
18	FCA	TYPE	P	Point/Node Feature

A.6.3.1.4 Obstacles coverage glossary.

AREA FEATURES

AL060 Dragon Teeth Regularly spaced concrete or metal barriers laid in single or multiple rows to prevent vehicle movement.

DB080 Depression A low area surrounded by higher ground.

ZD012 Geographic Information Point A location where geographic information or statistics may apply.(A feature of military significance and not captured by any other FACC code).
TXT Text Attribute Narrative or other description.

LINE FEATURES

AL060 Dragon Teeth Regularly spaced concrete or metal barriers laid in single or multiple rows to prevent vehicle movement.

AL260 Wall A solid man-made barrier of heavy material used as an enclosure or boundary or for protection.

AQ113 Pipeline/Pipe A tube for the conveyance of liquids or gases.
LOC Location Category Placement relative to ground surface, water surface, or shoreline.

BH100 Moat A trench usually filled with water, that surrounds a body of land.

DB010 Bluff/Cliff/Escarpment A steep, vertical, or overhanging face of rock or earth.

DB070 Cut An excavation of the Earth's surface to provide passage for a road, railroad, canal, etc.

DB090 Embankment A raised solid fill linear mound of earth or other material.
USE Usage Use.

DB190 Volcanic Dike A steep ridge of igneous rock.

EA020 Hedgerow A continuous growth of shrubbery planted as a fence, a boundary, or a wind break.

ZD012 Geographic Information Point A location where geographic information or statistics may apply. (A feature of military significance and not captured by any other FACC code).
TXT Text Attribute Narrative or other description.

NODE FEATURES

AL195 Ramp An inclined plane usually man-made for moving between two different levels. (Used for pipeline crossing point)

ZD012 Geographic Information Point A location where geographic information or statistics may apply. (A feature of military significance and not captured by any other FACC code).
TXT Text Attribute Narrative or other description.

TABLE 44. Obstacles integer value description table.

{Header Length}L; INT.VDT,Obstacles Integer Value Description Table;-; ID=I,1,P,Row Identifier,-,-,-,: TABLE=T,12,N,Feature Class Table Name,-,-,-,: ATTRIBUTE=T,3,N,Attribute Name,-,-,-,: VALUE=I,1,N,Attribute Value,-,-,-,: DESCRIPTION=T,50,N,Attribute Value Description,-,-,-,:;				
1	OBSLINE.LFT	LOC	000	Unknown
2	OBSLINE.LFT	LOC	8	On Ground Surface
3	OBSLINE.LFT	LOC	25	Suspended or Elevated Above Ground or Water Surface
4	OBSLINE.LFT	USE	000	Unknown
5	OBSLINE.LFT	USE	69	Levee/Dike
6	OBSLINE.LFT	USE	139	Fill

A.6.3.2 Slope/surface configuration coverage. This coverage contains area features that represent homogeneous classes of ground slope ranges. The Feature Class Schema table creates the relationship between the feature class and primitive tables as shown in TABLE 45. Area feature tables and feature classes are

presented in TABLES 46 through 48. The value description tables for the surface configuration coverage are provided in TABLES 49 and 50. Slope ranges are expressed in percent slope (Tangent of the angle X 100) and defined as the degree or extent of deviation from the horizontal. Selected water bodies are delineated as separate features. Minimum size for an area feature is 50,000 square meters ground area (polygon = 50m by 1000m).

TABLE 45. Slope/surface configuration feature class schema table (FCS).

```
{Header Length}L;
Slope/Surface Configuration Feature Class Schema Table;-;
ID=I,1,P,Row Identifier,-,-,-,:
FEATURE_CLASS=T,8,N,Name of Feature Class,-,-,-,:
TABLE1=T,12,N,First Table in a Relationship,-,-,-,:
TABLE1_KEY=T,16,N,Column Name in First Table,-,-,-,:
TABLE2=T,12,N,Second Table in a Relationship,-,-,-,:
TABLE2_KEY=T,9,N,Column Name in a Second Table,-,-,-,:;
```

1	SLPAREA	SLPAREA.AFT	FAC_ID	FAC	ID
2	SLPAREA	FAC	ID	SLPAREA.AFT	FAC_ID
3	SLWAREA	SLWAREA.AFT	FAC_ID	FAC	ID
4	SLWAREA	FAC	ID	SLWAREA.AFT	FAC_ID

TABLE 46. Slope/surface configuration area feature table.

```
{Header Length}L;
SLPAREA.AFT,Slope/Surface Configuration Area Feature Table;-;
ID=I,1,P,Row Identifier,-,-,-,:
FAC_ID=I,1,N,Face Primitive Foreign Key,-,-,-,:
F_CODE=T,5,N,FACC Feature Code,CHAR.VDT,-,-,:
GSC=I,1,N,Ground Slope Category,INT.VDT,-,-,:;
```

A.6.3.2.1 Slope area attribute definitions.

Column	Description	Value	Value Meaning	Applicable F_Code for Each Attribute Value
ID	Row Identifier	Sequential beginning with 1		
F_CODE	FACC Feature Code	SA050	Slope Polygon	

Column	Description	Value	Value Meaning	Applicable F_Code for Each Attribute Value
GSC	Ground Slope Category			
		0	Unknown	SA050
		1	0 to >45% Naturally or culturally dissected land	SA050
		2	0 to <=3% slope range	SA050
		3	>3% to <=10% slope range	SA050
		4	>10% to <=20% slope range	SA050
		5	>20% to <=30% slope range	SA050
		6	>30% to <=45% slope range	SA050
		7	>45% slope	SA050

TABLE 47. Slope/surface configuration water and miscellaneous area feature table.

```
{Header Length}L;
SLWAREA.AFT,Slope/Surface Configuration Water Area Feature
Table;-;
ID=I,1,P,Row Identifier,-,-,-,:
FAC_ID=I,1,N,Face Primitive Foreign Key,-,-,-,:
F_CODE=T,5,N,FACC Feature Code,CHAR.VDT,F_CODE2.ATI,-,:
TXT=T,*,N,Text Attribute,-,-,-,:;
```

A.6.3.2.2 Slope water area attribute definitions.

Column	Description	Value	Value Meaning	Applicable F_Code for Each Attribute Value
ID	Row Identifier	Sequential beginning with 1		
F_CODE	FACC Feature Code			
		SA010	Common Open Water	
		ZD012	Geographic Information Point	
TXT	Text Attribute			
		Zero length	Null	SA010
		VLT Character text string		ZD012

TABLE 48. Slope feature class attribute table.

{Header Length}L; Slope/Surface Configuration Feature Class Attribute Table;-; ID=I,1,P,Row Identifier,-,-,-,: FCLASS=T,8,U,Feature Class Name,-,-,-,: TYPE=T,1,N,Feature Type,CHAR.VDT,-,-,: DESCR=T,*,N,Description,-,-,-,:;			
1	SLPAREA	A	Slope Polygon Features
2	SLWAREA	A	Open Water Area Features

Column	Description	Value	Value Meaning	Applicable Feature Class for Each Attribute Value
ID	Row Identifier	Sequential beginning with 1		
FCLASS	Feature Class Name			
		SLPAREA		
		SLWAREA		
TYPE	Feature Type			
		A	Area Feature	SLPAREA, SLWAREA
DESCR	Description			
		Slope Polygon Features		SLPAREA
		Open Water Area Features		SLWAREA

TABLE 49. Slope/surface configuration character value description table.

{Header Length}L; CHAR.VDT,Slope/Surface Configuration Character Value Description Table;-; ID=I,1,P,Row Identifier,-,-,-,: TABLE=T,12,N,Feature Class Table Name,-,-,-,: ATTRIBUTE=T,6,N,Attribute Name,-,-,-,: VALUE=T,5,N,Attribute Value,-,-,-,: DESCRIPTION=T,50,N,Attribute Value Description,-,-,-,:;				
1	SLPAREA.AFT	F_CODE	SA050	Slope Polygon
2	SLWAREA.AFT	F_CODE	SA010	Common Open Water
3	SLWAREA.AFT	F_CODE	ZD012	Geographic Information Point
4	FCA	TYPE	A	Area Feature

A.6.3.2.3 Slope/surface configuration coverage glossary.

AREA FEATURES

SA010 Common Open Water An area containing any surface water that is flowing or free standing such as lakes, canals, rivers, oceans, reservoirs, etc.

SA050 Slope Polygon An area enclosing a group of slope values falling within a set range.
GSC Ground Slope Category Range indicating the slope of ground within delineated area of feature, reported in percent.

ZD012 Geographic Information Point A location where geographic information or statistics may apply.(A feature of military significance and not captured by any other FACC code).
TXT Text Attribute Narrative or other description.

TABLE 50. Slope/surface configuration integer value description table

{Header Length}L;
INT.VDT,Slope/Surface Configuration Integer Value Description Table;-;
ID=I,1,P,Row Identifier,-,-,-,:
TABLE=T,12,N,Feature Class Table Name,-,-,-,:
ATTRIBUTE=T,3,N,Attribute Name,-,-,-,:
VALUE=I,1,N,Attribute Value,-,-,-,:
DESCRIPTION=T,50,N,Attribute Value Description,-,-,-,:;

1	SLPAREA.AFT	GSC	000	Unknown
2	SLPAREA.AFT	GSC	1	0 to >45% Culturally or naturally dissected land
3	SLPAREA.AFT	GSC	2	<=3%
4	SLPAREA.AFT	GSC	3	>3% to <=10%
5	SLPAREA.AFT	GSC	4	>10% to <=20%
6	SLPAREA.AFT	GSC	5	>20% to <=30%
7	SLPAREA.AFT	GSC	6	>30% to <=45%
8	SLPAREA.AFT	GSC	7	>45%

A.6.3.3 Soil/surface materials coverage. The Feature Class Schema table creates the relationship between the feature class and primitive tables as shown in TABLE 51. Area feature and feature class attribute tables are presented in TABLES 52 through 54. The value description tables for the surface materials coverage are provided in TABLES 55 and 56. This coverage contains soil groupings base on the Unified Soil Classification System and other surface materials such as rock outcrops, permanent snowfields, and evaporites. Selected water bodies and urban areas are delineated as features and represented as a separate feature class. The Surface Roughness Description (SRD) contains textual description on the micro-relief of the terrain within that soil

polygon and may be used for predictions relating to mobility, sources of construction materials, and potential landing areas.

TABLE 51. Soil/surface materials feature class schema table (FCS).

```
{Header Length}L;
Soils/Surface Materials Feature Class Schema Table;-;
ID=I,1,P,Row Identifier,-,-,-,:
FEATURE_CLASS=T,8,N,Name of Feature Class,-,-,-,:
TABLE1=T,12,N,First Table in a Relationship,-,-,-,:
TABLE1_KEY=T,16,N,Column Name in First Table,-,-,-,:
TABLE2=T,12,N,Second Table in a Relationship,-,-,-,:
TABLE2_KEY=T,9,N,Column Name in Second Table,-,-,-,:;
```

1	SMCAREA	SMCAREA.AFT	FAC_ID	FAC	ID
2	SMCAREA	FAC	ID	SMCAREA.AFT	FAC_ID
3	SMWAREA	SMWAREA.AFT	FAC_ID	FAC	ID
4	SMWAREA	FAC	ID	SMWAREA.AFT	FAC_ID

TABLE 52. Soil/surface materials area feature table.

```
{Header Length}L;
SMCAREA.AFT,Soil/Surface Materials Area Feature Table;-;
ID=I,1,P,Row Identifier,-,-,-,:
FAC_ID=I,1,N,Face Primitive Foreign Key,-,-,-,:
F_CODE=T,5,N,FACC Feature Code,CHAR.VDT,F_CODE1.ATI,-,:
SDC=I,1,N,Soil Depth Category,INT.VDT,-,-,:
SRD=I,1,N,Surface Roughness Description,INT.VDT,-,-,:
STP=I,1,N,Soil Type,INT.VDT,-,-,:
SWC=I,1,N,Soil Wetness Condition,INT.VDT,-,-,:;
```

A.6.3.3.1 Soil area attribute definitions.

Column	Description	Value	Value Meaning	Applicable F_Code for Each Attribute Value
ID	Row Identifier	Sequential beginning with 1		
F_CODE	FACC Feature Code			
		DA010	Ground Surface Element	
		SA030	Exposed Bedrock	
		SA040	Permanent Snowfield	

Column	Description	Value	Value Meaning	Applicable F_Code for Each Attribute Value
SDC	Soil Depth Category			
		0	Unknown	DA010
		1	<0.5 meters	DA010
		2	>=0.5 meters	DA010
		-MAXINT	Null	SA030, SA040
SRD	Surface Roughness Description			
		0	Unknown	DA010, SA030, SA040
		1	No Surface roughness effect	DA010, SA030, SA040
		2	Area of high landslide potential	DA010, SA030, SA040
	Natural irregularities above surface			
		11	Surface of numerous cobbles and boulders	DA010, SA030, SA040
		12	Areas of stony terrain	DA010, SA030, SA040
		13	Stony soil with surface rock	DA010, SA030, SA040
		14	Stony soil with scattered boulders	DA010, SA030, SA040
		15	Stony soil with numerous boulders	DA010, SA030, SA040
		16	Numerous boulders	DA010, SA030, SA040
		17	Numerous rock outcrops	DA010, SA030, SA040
		18	Area of scattered boulders	DA010, SA030, SA040
		19	Talus slope	DA010, SA030, SA040
		20	Boulder Field	DA010, SA030, SA040
	Bedrock/exposed surface material			
		31	Highly fractured surface rock	DA010, SA030, SA040
		32	Weathered lava flows	DA010, SA030, SA040

Column	Description	Value	Value Meaning	Applicable F_Code for Each Attribute Value
		33	Unweathered lava flows	DA010, SA030, SA040
		34	Stony soil with numerous rock outcrops	DA010, SA030, SA040
		35	Irregular surface with deep fractures of foliation	DA010, SA030, SA040
		36	Rugged terrain with numerous rock outcrops	DA010, SA030, SA040
		37	Rugged bedrock surface	DA010, SA030, SA040
		38	Sand dunes	DA010, SA030, SA040
		39	Sand dunes/low	DA010, SA030, SA040
		40	Sand dunes/high	DA010, SA030, SA040
		41	Active sand dunes	DA010, SA030, SA040
		42	Stabilized sand dunes	DA010, SA030, SA040
		43	Highly distorted area, sharp rocky ridges	DA010, SA030, SA040
	Fluvial, glacial influences			
		51	Stony soil cut by numerous gullies	DA010, SA030, SA040
		52	Moderately dissected terrain	DA010, SA030, SA040
		53	Moderately dissected terrain with scattered rock outcrops	DA010, SA030, SA040
		54	Dissected floodplain	DA010, SA030, SA040
		55	Highly dissected terrain	DA010, SA030, SA040

Column	Description	Value	Value Meaning	Applicable F_Code for Each Attribute Value
		56	Area with deep erosional gullies	DA010, SA030, SA040
		57	Steep, rugged, dissected terrain with narrow gullies	DA010, SA030, SA040
		58	Karst/areas of numerous sinkholes and solution valleys	DA010, SA030, SA040
		59	Karst/area of numerous sinkholes	DA010, SA030, SA040
		60	Karst/hummocky terrain covered with large conical hills	DA010, SA030, SA040
		61	Karst/hummocky terrain covered with low, broad-based mounds	DA010, SA030, SA040
		62	Arroyo/wadi/wash	DA010, SA030, SA040
		63	Playa/dry lake	DA010, SA030, SA040
		64	Area of numerous meander scars and/or oxbow lakes	DA010 SA030, SA040
		65	Solifluction lobes and frost scars	DA010, SA030, SA040
		66	Hummocky ground, areas of frost heaving	DA010, SA030, SA040
		67	Area of frost polygons	DA010, SA030, SA040
		68	Area containing sabkhas	DA010 SA030, SA040
		69	Area of numerous small lakes and ponds	DA010, SA030, SA040
		70	Area of numerous crevasses	DA010, SA030, SA040
	Cultural, man-made influences			
		81	Area of numerous terraces	DA010, SA030, SA040

Column	Description	Value	Value Meaning	Applicable F_Code for Each Attribute Value
		82	Quarries	DA010, SA030, SA040
		83	Strip mines	DA010, SA030, SA040
		84	Quarry/gravel pit	DA010, SA030, SA040
		85	Quarry/sand pit	DA010, SA030, SA040
		86	Mine tailings/waste piles	DA010, SA030, SA040
		87	Salt evaporators	DA010, SA030, SA040
		88	Area of numerous dikes	DA010, SA030, SA040
		89	Area of numerous diked fields	DA010, SA030, SA040
		90	Area of numerous fields	DA010, SA030, SA040
		91	Area of numerous stone walls	DA010, SA030, SA040
		92	Area of numerous man-made canals/drains/ditches	DA010, SA030, SA040
		93	Area of numerous terraced fields	DA010, SA030, SA040
		94	Parallel earthen mounds (row crops)	DA010, SA030, SA040
		95	Area of numerous hedgerows	DA010, SA030, SA040
STP	Soil Type			
		0	Unknown	DA010
		1	GW Well graded gravels or gravel-sand mixtures	DA010
		2	GP Poorly graded gravels or gravel-sand mixtures	DA010
		3	GM Silty gravels, gravel-sand-silt mixtures	DA010

Column	Description	Value	Value Meaning	Applicable F_Code for Each Attribute Value
		4	GC Clayey gravels, gravel-sand-clay mixtures	DA010
		5	SW Well graded sand or gravelly sands	DA010
		6	SP Poorly graded sands or gravelly sands	DA010
		7	SM Silty sands, sand-silt mixture	DA010
		8	SC Clayey sands, sand-clay mixtures	DA010
		9	ML Inorganic silts and very fine sands	DA010
		10	CL Inorganic clays of low to medium plasticity	DA010
		11	OL Organic silts and organic silty clays	DA010
		12	CH Inorganic clays of high plasticity, fat clays	DA010
		13	MH Inorganic silts, micaceous or diatomeceous	DA010
		14	OH Organic clays of medium to high plasticity	DA010
		15	PT Peat and other highly organic soils	DA010
		17	ML-CL soil type having both ML and CL characteristics	DA010
		18	EV Evaporites	DA010
		999	Other	DA010
		-MAXINT	Null	SA030, SA040
SWC	Soil Wetness Condition			
		0	Unknown	DA010
		1	Dry	DA010
		2	Moist	DA010
		3	Wet	DA010
		999	Other	DA010
		-MAXINT	Null	SA030, SA040

TABLE 53. Soil open water and developed area feature table.

```
{Header Length}L;
SMWAREA.AFT,Soil Open Water and Developed Area Feature Table;-;
ID=I,1,P,Row Identifier,-,-,-,:
FAC_ID=I,1,N,Face Primitive Foreign Key,-,-,-,:
F_CODE=T,5,N,FACC Feature Code,CHAR.VDT,F_CODE2.ATI,-,:
TXT=T,*,N,Text Attribute,-,-,-,:;
```

A.6.3.3.2 Soil open water and developed area attribute definitions.

Column	Description	Value	Value Meaning	Applicable F_Code for Each Attribute Value
ID	Row Identifier	Sequential beginning with 1		
F_CODE	FACC Feature Code			
		SA010	Common Open Water	
		SA020	Disturbed Soil	
		ZD012	Geographic Information Point	
TXT	Text Attribute			
		Zero length VLT	Null	SA010, SA020
		Character text string		ZD012

TABLE 54. Soil/Surface materials feature class attribute table.

{Header Length}L;			
Soil/Surface Materials Feature Class Attribute Table;-;			
ID=I,1,P,Row Identifier,-,-,-,:			
FCLASS=T,8,U,Feature Class Name,-,-,-,:			
TYPE=T,1,N,Feature Type,CHAR.VDT,-,-,:			
DESCR=T,*,N,Description,-,-,-,:;			
1	SMCAREA	A	Soil polygons
2	SMWAREA	A	Open water and miscellaneous features

Column	Description	Value	Value Meaning	Applicable Feature Class for Each Attribute Value
ID	Row Identifier	Sequential beginning with 1		
FCLASS	Feature Class Name			
		SMCAREA		
		SMWAREA		
TYPE	Feature Type			
		A	Area Feature	SMCAREA, SMWAREA
DESCR	Description			
		Soil polygons		SMCAREA
		Open water and miscellaneous features		SMWAREA

TABLE 55. Soil/surface materials character value description table.

{Header Length}L; CHAR.VDT, Soil/Surface Materials Character Value Description Table;-; ID=I,1,P,Row Identifier,-,-,-,: TABLE=T,12,N,Feature Class Table Name,-,-,-.: ATTRIBUTE=T,6,N,Attribute Name,-,-,-,: VALUE=T,5,N,Attribute Value,-,-,-,: DESCRIPTION=T,50,N,Attribute Value Description,-,-,-,:;				
1	SMCAREA.AFT	F_CODE	DA010	Ground Surface
2	SMCAREA.AFT	F_CODE	SA030	Exposed Bedrock
3	SMCAREA.AFT	F_CODE	SA040	Permanent Snowfield
4	SMWAREA.AFT	F_CODE	SA010	Common Open Water
5	SMWAREA.AFT	F_CODE	SA020	Disturbed Soil
6	SMWAREA.AFT	F_CODE	ZD012	Geographic Information Point
7	FCA	TYPE	A	Area Feature

A.6.3.3.3 Soil/surface materials coverage glossary.

AREA FEATURES

DA010 Ground Surface Element The surficial layer of consolidated and unconsolidated earth materials occurring on the land surface.
SDC Soil Depth Category Estimated general depth of soil or unconsolidated surface material.
SRD Surface Roughness Description A code that describes the condition of the surface material that may be used for mobility predictions, construction material, and landing sites.

SA010 Common Open Water An area containing any surface water that is flowing or free standing such as lakes, rivers, oceans, reservoirs, etc.

SA020 Disturbed Soil An area that has been so disturbed by human activity that no single soil type can be accurately identified. These areas may include built-up areas, strip mines, landfills, railroad yards, etc.
STP Soil Type Soil categories described by the Unified Soil Classification System (USCS).
SWC Soil Wetness Condition General moisture content or condition of the soil.

SA030 Exposed Bedrock Areas that contain no or little soil (less than 10%) containing bare rock or other extrusive material such as lava.
SRD Surface Roughness Description A code that describes the condition of the surface material that may be used for mobility predictions, construction material, and landing sites.

SA040 Permanent Snowfield An area permanently covered by snow or ice that covers a land mass, such as glaciers and snowfields.
SRD Surface Roughness Description A code that describes the condition of the surface material that may be used for mobility predictions, construction material, and landing sites.

ZD012 Geographic Information Point A location where geographic information or statistics may apply. (A feature of military significance and not captured by any other FACC code).
TXT Text Attribute Narrative or other description.

TABLE 56. Soil/surface material integer value description table.

{Header Length}L;
INT.VDT,Soil/Surface Materials Integer Value Description Table;-;
ID=I,1,P,Row Identifier,-,-,-,:
TABLE=T,12,N,Feature Class Table Name,-,-,-,:
ATTRIBUTE=T,3,N,Attribute Name,-,-,-,:
VALUE=I,1,N,Attribute Value,-,-,-,:
DESCRIPTION=T,60,N,Attribute Value Description,-,-,-,:;

1	SMCAREA.AFT	SDC	000	Unknown
2	SMCAREA.AFT	SDC	1	<0.5 meters
3	SMCAREA.AFT	SDC	2	>=0.5 meters
4	SMCAREA.AFT	SRD	000	Unknown
5	SMCAREA.AFT	SRD	1	No surface roughness effect
6	SMCAREA.AFT	SRD	2	Area of high landslide potential
7	SMCAREA.AFT	SRD	11	Surface of numerous cobbles and boulders
8	SMCAREA.AFT	SRD	12	Areas of stony terrain
9	SMCAREA.AFT	SRD	13	Stony soil with surface rock
10	SMCAREA.AFT	SRD	14	Stony soil with scattered boulders
11	SMCAREA.AFT	SRD	15	Stony soil with numerous boulders
12	SMCAREA.AFT	SRD	16	Numerous boulders
13	SMCAREA.AFT	SRD	17	Numerous rock outcrops
14	SMCAREA.AFT	SRD	18	Area of scattered boulders
15	SMCAREA.AFT	SRD	19	Talus slope
16	SMCAREA.AFT	SRD	20	Boulder field
17	SMCAREA.AFT	SRD	31	Highly fractured rock surface
18	SMCAREA.AFT	SRD	32	Weathered lava flows
19	SMCAREA.AFT	SRD	33	Unweathered lava flows
20	SMCAREA.AFT	SRD	34	Stony soil with numerous rock outcrops
21	SMCAREA.AFT	SRD	35	Irregular surface with deep fractures of foliation

TABLE 56. Soil/surface material integer value description table - Continued.

22	SMCAREA.AFT	SRD	36	Rugged terrain with numerous rock outcrops
23	SMCAREA.AFT	SRD	37	Rugged bedrock surface
24	SMCAREA.AFT	SRD	38	Sand dunes
25	SMCAREA.AFT	SRD	39	Sand dunes/low
26	SMCAREA.AFT	SRD	40	Sand dunes/high
27	SMCAREA.AFT	SRD	41	Active sand dunes
28	SMCAREA.AFT	SRD	42	Stabilized sand dunes
29	SMCAREA.AFT	SRD	43	Highly distorted area, sharp rocky ridges
30	SMCAREA.AFT	SRD	51	Stony soil cut by numerous gullies
31	SMCAREA.AFT	SRD	52	Moderately dissected terrain
32	SMCAREA.AFT	SRD	53	Moderately dissected terrain with scattered rock outcrops
33	SMCAREA.AFT	SRD	54	Dissected floodplain
34	SMCAREA.AFT	SRD	55	Highly dissected terrain
35	SMCAREA.AFT	SRD	56	Area with deep erosional gullies
36	SMCAREA.AFT	SRD	57	Steep, rugged, dissected terrain with narrow gullies
37	SMCAREA.AFT	SRD	58	Karst/areas of numerous sinkholes and solution valleys
38	SMCAREA.AFT	SRD	59	Karst/area of numerous sinkholes
39	SMCAREA.AFT	SRD	60	Karst/hummocky terrain covered with large conical hills
40	SMCAREA.AFT	SRD	61	Karst/hummocky terrain covered with low, broad-based mounds
41	SMCAREA.AFT	SRD	62	Arroyo/wadi/wash
42	SMCAREA.AFT	SRD	63	Playa/dry lake
43	SMCAREA.AFT	SRD	64	Area of numerous meander scars and/or oxbow lakes
44	SMCAREA.AFT	SRD	65	Solifluction lobes and frost scars
45	SMCAREA.AFT	SRD	66	Hummocky ground, areas of frost heaving
46	SMCAREA.AFT	SRD	67	Area of frost polygons
47	SMCAREA.AFT	SRD	68	Area containing sabkhas
48	SMCAREA.AFT	SRD	69	Area of numerous small lakes and ponds
49	SMCAREA.AFT	SRD	70	Area of numerous crevasses
50	SMCAREA.AFT	SRD	81	Area of numerous terraces
51	SMCAREA.AFT	SRD	82	Quarries
52	SMCAREA.AFT	SRD	83	Strip mines
53	SMCAREA.AFT	SRD	84	Quarry/gravel pit
54	SMCAREA.AFT	SRD	85	Quarry/sand pit
55	SMCAREA.AFT	SRD	86	Mine tailings/waste piles
56	SMCAREA.AFT	SRD	87	Salt evaporators

TABLE 56. Soil/surface material integer value description table - Continued.

57	SMCAREA.AFT	SRD	88	Area of numerous dikes
58	SMCAREA.AFT	SRD	89	Area of numerous diked fields
59	SMCAREA.AFT	SRD	90	Area of numerous fences
60	SMCAREA.AFT	SRD	91	Area of numerous stone walls
61	SMCAREA.AFT	SRD	92	Area of numerous man-made canals/drains/ ditches
62	SMCAREA.AFT	SRD	93	Area of numerous terraced fields
63	SMCAREA.AFT	SRD	94	Parallel earthen mounds (row crops)
64	SMCAREA.AFT	SRD	95	Area of numerous hedgerows
65	SMCAREA.AFT	STP	000	Unknown
66	SMCAREA.AFT	STP	1	GW Well graded gravels or gravel-sand mixtures
67	SMCAREA.AFT	STP	2	GP Poorly graded gravels or gravel-sand mixtures
68	SMCAREA.AFT	STP	3	GM Silty gravels, gravel-sand-silt mixtures
69	SMCAREA.AFT	STP	4	GC Clayey gravels, gravel-sand-clay mixture
70	SMCAREA.AFT	STP	5	SW Well graded sand or gravelly sands
71	SMCAREA.AFT	STP	6	SP Poorly graded sands or gravelly sands
72	SMCAREA.AFT	STP	7	SM Silty sands, sand-silt mixture
73	SMCAREA.AFT	STP	8	SC Clayey sands, sand-clay mixtures
74	SMCAREA.AFT	STP	9	ML Inorganic silts and very fine sands
75	SMCAREA.AFT	STP	10	CL Inorganic clays of low to medium plasticity
76	SMCAREA.AFT	STP	11	OL Organic silts and organic silty clays
77	SMCAREA.AFT	STP	12	CH Inorganic clays of high plasticity, fat clays
78	SMCAREA.AFT	STP	13	MH Inorganic silts, micaceous or diatomaceous
79	SMCAREA.AFT	STP	14	OH Organic clays of medium to high plasticity
80	SMCAREA.AFT	STP	15	PT Peat and other highly organic soils
81	SMCAREA.AFT	STP	17	ML-CL Soil type having both ML and CL characteristics
82	SMCAREA.AFT	STP	18	EV Evaporites
83	SMCAREA.AFT	STP	999	Other
84	SMCAREA.AFT	SWC	000	Unknown
85	SMCAREA.AFT	SWC	1	Dry
86	SMCAREA.AFT	SWC	2	Moist
87	SMCAREA.AFT	SWC	3	Wet
88	SMCAREA.AFT	SWC	999	Other

A.6.3.4 Surface drainage coverage. This coverage contains areal, linear, point, and node features relating to surface hydrographic features such as rivers, canals, locks, dams, and lakes. The feature class schema table creates the relationship between the feature class and primitive tables as shown in TABLE 57. Area, line, point, node, join, and feature class attribute tables are presented in TABLES 58 thru 66. Feature join tables are used for linear surface drainage features where a feature may contain multiple edge primitives, such as a river, canal, or dam. The value description tables for the surface drainage coverage are provided in TABLES 67 and 68. River and canals with gap width greater than 180 decimeters (18.0 meters)

will be portrayed as area features, and those less than or equal to 180 decimeters as line features.

TABLE 57. Surface drainage feature class schema table (FCS).

{Header Length}L;
Surface Drainage Feature Class Schema Table;-;
ID=I,1,P,Row Identifier,-,-,-,:
FEATURE_CLASS=T,8,N,Name of Feature Class,-,-,-,:
TABLE1=T,12,N,First Table in a Relationship,-,-,-,:
TABLE1_KEY=T,16,N,Column Name in First Table,-,-,-,:
TABLE2=T,12,N,Second Table in a Relationship,-,-,-,:
TABLE2_KEY=T,16,N,Column Name in Second Table,-,-,-,:;

1	SDRAREA	SDRAREA.AFT	FAC_ID	FAC	ID
2	SDRAREA	FAC	ID	SDRAREA.AFT	ID
3	SDCAREA	SDCAREA.AFT	FAC_ID	FAC	ID
4	SDCAREA	FAC	ID	SDCAREA.AFT	ID
5	SDRLINE	SDRLINE.LFT	ID	SDRLINE.LJT	SDRLINE.LFT_ID
6	SDRLINE	SDRLINE.LJT	EDG_ID	EDG	ID
7	SDRLINE	EDG	ID	SDRLINE.LJT	EDG_ID
8	SDRLINE	SDRLINE.LJT	SDRLINE.LFT_ID	SDRLINE.LFT	ID
9	SDCLINE	SDCLINE.LFT	ID	SDCLINE.LJT	SDCLINE.LFT_ID
10	SDCLINE	SDCLINE.LJT	EDG_ID	EDG	ID
11	SDCLINE	EDG	ID	SDCLINE.LJT	EDG_ID
12	SDCLINE	SDCLINE.LJT	SDCLINE.LFT_ID	SDCLINE.LFT	ID
13	SDRPOINT	SDRPOINT.PFT	END_ID	END	ID
14	SDRPOINT	END	ID	SDRPOINT.PFT	END_ID
15	SDRNODE	SDRNODE.PFT	CND_ID	CND	ID
16	SDRNODE	CND	ID	SDRNODE.PFT	CND_ID

TABLE 58. Surface drainage channel area feature table.

```
{Header Length}L;
SDCAREA.AFT,Surface Drainage Channel Area Feature Table;-;
ID=I,1,P,Row Identifier,-,-,-,:
FAC_ID=I,1,N,Face Primitive Foreign Key,-,-,-,:
F_CODE=T,5,N,FACC Feature Code,CHAR.VDT,F_CODE2.ATI,-,:
BGL=I,1,N,Bank Gradient Left,INT.VDT,-,-,:
BGR=I,1,N,Bank Gradient Right,INT.VDT,-,-,:
BHL=I,1,N,Bank Height Left (decimeters),INT.VDT,-,-,:
BHR=I,1,N,Bank Height Right (decimeters),INT.VDT,-,-,:
BVL=I,1,N,Bank Vegetation Left,INT.VDT,-,-,:
BVR=I,1,N,Bank Vegetation Right,INT.VDT,-,-,:
HYC=I,1,N,Hydrological Category,INT.VDT,-,-,:
MCC=I,1,N,Material Composition Category,INT.VDT,-,-,:
TID=I,1,N,Tidal/Non-Tidal Category,INT.VDT,-,-,:
WD3=I,1,N,Military Gap Width (decimeters),INT.VDT,-,-,:
WDA=I,1,N,Water Depth Average (meters),INT.VDT,-,-,:
WVA=I,1,N,Water Velocity Average (meters/second),INT.VDT,-,-,:;
```

A.6.3.4.1 Surface drainage channel area attribute definitions.

Column	Description	Value	Value Meaning	Applicable F_Code for Each Attribute Value
ID	Row Identifier	Sequential beginning with 1		
F_CODE	FACC Feature Code			
		BH020	Canal	
		BH140	River/Stream	
		DB200	Gully/Gorge	
BGL	Bank Gradient Left			
		0	Unknown	BH020, BH140, DB200
		12	Default for 0 to <30% range	BH020, BH140, DB200
		38	Default for >=30% to <45% range	BH020, BH140, DB200
		52	Default for >=45% to <60% range	BH020, BH140, DB200
		80	Default for >=60% range	BH020, BH140, DB200
		1 to 998	Allowable values	BH020, BH140, DB200

Column	Description	Value	Value Meaning	Applicable F_Code for Each Attribute Value
BGR	Bank Gradient Right			
		0	Unknown	BH020, BH140, DB200
		12	Default for 0 to <30% range	BH020, BH140, DB200
		38	Default for >=30% to <45% range	BH020, BH140, DB200
		52	Default for >=45% to <60% range	BH020, BH140, DB200
		80	Default for >=60% range	BH020, BH140, DB200
		1 to 998	Allowable values	BH020, BH140, DB200
BHL	Bank Height Left (decimeters)			
		0	Unknown	BH020, BH140, DB200
		2	Default for >0.0 to <=0.5 m range	BH020, BH140, DB200
		8	Default for >0.5 m to <=1.0 m range	BH020, BH140, DB200
		30	Default for >1.0 m to <=5.0 m range	BH020, BH140, DB200
		75	Default for >5.0 m range	BH020, BH140, DB200
		1 to 9999	Allowable values	BH020, BH140, DB200
BHR	Bank Height Right (decimeters)			
		0	Unknown	BH020, BH140, DB200
		2	Default for >0.0 to <=0.5 m range	BH020, BH140, DB200
		8	Default for >0.5 m to <=1.0 m range	BH020, BH140, DB200

Column	Description	Value	Value Meaning	Applicable F_Code for Each Attribute Value
		30	Default for >1.0 m to <=5.0 m range	BH020, BH140, DB200
		75	Default for >5.0 m range	BH020, BH140, DB200
		1 to 9999	Allowable values	BH020, BH140, DB200
BVL	Bank Vegetation Left			
		0	Unknown	BH020, BH140, DB200
		2	Sparse (>5% to <=15%)	BH020, BH140, DB200
		4	Dense (>50%)	BH020, BH140, DB200
BVR	Bank Vegetation Right			
		0	Unknown	BH020, BH140, DB200
		2	Sparse (>5% to <=15%)	BH020, BH140, DB200
		4	Dense (>50%)	BH020, BH140, DB200
HYC	Hydrological Category			
		0	Unknown	BH140
		6	Non-perennial/ Intermittent/Fluctuating	BH140
		8	Perennial/Permanent	BH140
		14	Braided	BH140
		-MAXINT	Null	BH020, DB200
MCC	Material Composition Category			
		0	Unknown	BH020, BH140, DB200
		5	Asphalt (= paved)	BH020, BH140, DB200
		7	Bedrock	BH020, BH140, DB200

Column	Description	Value	Value Meaning	Applicable F_Code for Each Attribute Value
		16	Clay (= clay and silt)	BH020, BH140, DB200
		46	Gravel (= gravel and cobble)	BH020, BH140, DB200
		84	Rock/Rocky (= rock and boulders)	BH020, BH140, DB200
		88	Sand (= sand and gravels)	BH020, BH140, DB200
		99	Silt (= silty sands)	BH020, BH140, DB200
TID	Tidal/Non-Tidal Category			
		0	Unknown	BH140
		2	Tidal/Tidal fluctuating	BH140
		-MAXINT	Null	BH020, DB200
WD3	Military Gap Width (decimeters)			
		0	Unknown	BH020, BH140, DB200
		340	>180 dm to <=500 dm Default range	BH020, BH140, DB200
		750	>500 dm to <=1000 dm Default range	BH020, BH140, DB200
		1210	>1000 dm to <=1420 dm Default range	BH020, BH140, DB200
		1710	>1420 dm Default range	BH020, BH140, DB200
		0,181 to 50000	Allowable values	BH020, BH140, DB200
WDA	Water Depth Average (meters)			
		0	Unknown	BH020, BH140, DB200
		1	Default for >0.0 to <=0.8 m range	BH020, BH140, DB200
		2	Default for >0.8 m to <=1.6 m range	BH020, BH140, DB200

Column	Description	Value	Value Meaning	Applicable F_Code for Each Attribute Value
		3	Default for >1.6 m to <=2.4 m range	BH020, BH140, DB200
		4	Default for >2.4 m range	BH020, BH140, DB200
WVA	Water Velocity Average (meters/second)			
		0	Unknown	BH020, BH140, DB200
		1	Default for >0.0 to <=1.5 m/sec range	BH020, BH140, DB200
		2	Default for >1.5 m/sec range	BH020, BH140, DB200

TABLE 59. Surface drainage area feature table.

```
{Header Length}L;
SDRAREA.AFT,Surface Drainage Area Feature Table;-;
ID=I,1,P,Row Identifier,-,-,-,:
FAC_ID=I,1,N,Face Primitive Foreign Key,-,-,-,:
F_CODE=T,5,N,FACC Feature Code,CHAR.VDT,F_CODE1.ATI,-,:
TXT=T,*,N,Text Attribute,-,-,-,:
```

A.6.3.4.2 Surface drainage area attribute definitions.

Column	Description	Value	Value Meaning	Applicable F_Code for Each Attribute Value
ID	Row Identifier	Sequential beginning with 1		
F_CODE	FACC Feature Code			
		BA030	Island	
		SA010	Common Open Water	
		ZD012	Geographic Information Point	
TXT	Text Description			
		Zero length	Null	BA030, SA010
		VLT Character text string		ZD012

TABLE 60. Surface drainage channel line feature table.

```
{Header Length}L;
SDCLINE.LFT,Surface Drainage Channel Line Feature Table;-;
ID=I,1,P,Row Identifier,-,-,-,:
F_CODE=T,5,N,FACC Feature Code,CHAR.VDT,F_CODE1.LTI,-,:
BGL=I,1,N,Bank Gradient Left,INT.VDT,-,-,:
BGR=I,1,N,Bank Gradient Right,INT.VDT,-,-,:
BHL=I,1,N,Bank Height Left (decimeters),INT.VDT,-,-,:
BHR=I,1,N,Bank Height Right (decimeters),INT.VDT,-,-,:
BVL=I,1,N,Bank Vegetation Left,INT.VDT,-,-,:
BVR=I,1,N,Bank Vegetation Right,INT.VDT,-,-,:
HYC=I,1,N,Hydrological Category,INT.VDT,-,-,:
MCC=I,1,N.Material Composition Category,INT.VDT,-,-,:
TID=I,1,N,Tidal/Non-Tidal Category,INT.VDT,-,-,:
WD3=I,1,N,Military Gap Width (decimeters),INT.VDT,-,-,:
WDA=I,1,N,Water Depth Average (meters),INT.VDT,-,-,:
WVA=I,1,N,Water Velocity Average (meters/second),INT.VDT,-,-,:;
```

TABLE 61. Surface Drainage Channel line join table.

```
{Header Length}L;
SDCLINE.LJT,Surface Drainage Channel Line Join Table;-;
ID=I,1,P,Row Identifier,-,-,-,:
SDCLINE.LFT_ID=I,1,N,Feature Key,-,SDCLINE1.JTI,-,:
EDG_ID=I,1,N,Primitive Key,-,EDG1.JTI,-,:;
```

NOTE: This table is used to combine linear surface drainage features, such as rivers and canals with their associated edge primitives in a one-to-many relationship.

A.6.3.4.3 Surface drainage channel line attribute definitions.

Column	Description	Value	Value Meaning	Applicable F_Code for Each Attribute Value
ID	Row Identifier	Sequential beginning with 1		
F_CODE	FACC Feature Code			
		BH020	Canal	
		BH140	River/Stream	
		DB200	Gully/Gorge	

Column	Description	Value	Value Meaning	Applicable F_Code for Each Attribute Value
BGL	Bank Gradient Left			
		0	Unknown	BH020, BH140, DB200
		12	Default for 0 to <30% range	BH020, BH140, DB200
		38	Default for >=30% to <45% range	BH020, BH140, DB200
		52	Default for >=45% to <60% range	BH020, BH140, DB200
		80	Default for >=60% range	BH020, BH140, DB200
		1 to 998	Allowable values	BH020, BH140, DB200
BGR	Bank Gradient Right			
		0	Unknown	BH020, BH140, DB200
		12	Default for 0 to <30% range	BH020, BH140, DB200
		38	Default for >=30% to <45% range	BH020, BH140, DB200
		52	Default for >=45% to <60% range	BH020, BH140, DB200
		80	Default for >=60% range	BH020, BH140, DB200
		1 to 998	Allowable values	BH020, BH140, DB200
BHL	Bank Height Left (decimeters)			
		0	Unknown	BH020, BH140, DB200
		2	Default for >0.0 to <=0.5 m range	BH020, BH140, DB200
		8	Default for >0.5 m to <=1.0 m range	BH020, BH140, DB200

Column	Description	Value	Value Meaning	Applicable F_Code for Each Attribute Value
		30	Default for >1.0 m to <=5.0 m range	BH020, BH140, DB200
		75	Default for >5.0 m range	BH020, BH140, DB200
		1 to 9999	Allowable values	BH020, BH140, DB200
BHR	Bank Height Right (decimeters)			
		0	Unknown	BH020, BH140, DB200
		2	Default for >0.0 to <=0.5 m range	BH020, BH140, DB200
		8	Default for >0.5 m to <=1.0 m range	BH020, BH140, DB200
		30	Default for >1.0 m to <=5.0 m range	BH020, BH140, DB200
		75	Default for >5.0 m range	BH020, BH140, DB200
		1 to 9999	Allowable values	BH020, BH140, DB200
BVL	Bank Vegetation Left			
		0	Unknown	BH020, BH140, DB200
		2	Sparse (>5% to <=15%)	BH020, BH140, DB200
		4	Dense (>50%)	BH020, BH140, DB200
BVR	Bank Vegetation Right			
		0	Unknown	BH020, BH140, DB200
		2	Sparse (>5% to <=15%)	BH020, BH140, DB200
		4	Dense (>50%)	BH020, BH140, DB200

Column	Description	Value	Value Meaning	Applicable F_Code for Each Attribute Value
HYC	Hydrological Category			
		0	Unknown	BH140
		6	Non-perennial/ Intermittent/Fluctuating	BH140
		8	Perennial/Permanent	BH140
		14	Braided	BH140
		-MAXINT	Null	BH020, DB200
MCC	Material Composition Category			
		0	Unknown	BH020, BH140, DB200
		5	Asphalt (= paved)	BH020, BH140, DB200
		7	Bedrock	BH020, BH140, DB200
		16	Clay (= clay and silt)	BH020, BH140, DB200
		46	Gravel (= gravel and cobble)	BH020, BH140, DB200
		84	Rock/Rocky (= rock and boulders)	BH020, BH140, DB200
		88	Sand (= sand and gravels)	BH020, BH140, DB200
		99	Silt (= silty sands)	BH020, BH140, DB200
TID	Tidal/Non-Tidal Category			
		0	Unknown	BH140
		2	Tidal/Tidal fluctuating	BH140
		-MAXINT	Null	BH020, DB200
WD3	Military Gap Width (decimeters)			
		0	Unknown	BH020, BH140, DB200
		20	>0 to <=45 dm Default range	BH020, BH140, DB200

Column	Description	Value	Value Meaning	Applicable F_Code for Each Attribute Value
		113	>45 dm to <=180 dm Default range	BH020, BH140, DB200
		0 to 180	Allowable values	BH020, BH140, DB200
WDA	Water Depth Average (meters)			
		0	Unknown	BH020, BH140, DB200
		1	Default for >0.0 to <=0.8 m range	BH020, BH140, DB200
		2	Default for >0.8 m to <=1.6 m range	BH020, BH140, DB200
		3	Default for >1.6 m to <=2.4 m range	BH020, BH140, DB200
		4	Default for >2.4 m range	BH020, BH140, DB200
WVA	Water Velocity Average (meters/second)			
		0	Unknown	BH020, BH140, DB200
		1	Default for >0.0 to <=1.5 m/sec range	BH020, BH140, DB200
		2	Default for >1.5 m/sec range	BH020, BH140, DB200

TABLE 62. Surface drainage line feature table.

```
{Header Length}L;
SDRLINE.LFT,Surface Drainage Line Feature Table;-;
ID=I,1,P,Row Identifier,-,-,-,:
F_CODE=T,5,N,FACC Feature Code,CHAR.VDT,F_CODE2.LTI,-,:
ACC=I,1,N,Accuracy Category,INT.VDT,-,-,:
EXS=I,1,N,Existence Category,INT.VDT,-,-,:
HGT=I,1,N,Height Above Surface Level (meters),INT.VDT,-,-,:
LEN=I,1,N,Length/Diameter (meters),INT.VDT,-,-,:
MCC=I,1,N,Material Composition Category,INT.VDT,-,-,:
TXT=T,*,N,Text Attribute,-,-,-,:
WD5=I,1,N,Width Top (meters),INT.VDT,-,-,:
WID=I,1,N,Width (meters),INT.VDT,-,-,:;
```

TABLE 63. Surface drainage line join table.

```
{Header Length}L;
SDRLINE.LJT,Surface Drainage Line Join Table;-;
ID=I,1,P,Row Identifier,-,-,-,:
SDRLINE.LFT_ID=I,1,N,Feature Key,-,SDRLINE2.JTI,-,:
EDG_ID=I,1,N,Primitive Key,-,EDG2.JTI,-,:;
```

NOTE: This table is used to combine linear surface drainage features, such as locks and dams with their associated edge primitives in a one-to-many relationship.

A.6.3.4.4 Surface drainage line attribute definitions.

Column	Description	Value	Value Meaning	Applicable F_Code for Each Attribute Value
ID	Row Identifier	Sequential beginning with 1		
F_CODE	FACC Feature Code			
		AQ111	Prepared Raft or Float Bridge Site	
		BH070	Ford	
		BI020	Dam	
		BI030	Lock	
		SA060	Covered Drainage	
		ZD012	Geographic Information Point	
ACC	Accuracy Category			
		0	Unknown	SA060
		1	Accurate	SA060
		2	Approximate	SA060
		-MAXINT	Null	AQ111, BI020, BI030, BH070, ZD012
EXS	Existence Category			
		0	Unknown	BI020, BI030
		1	Definite	BI020, BI030
		5	Under Construction	BI020, BI030
		-MAXINT	Null	AQ111, BH070, SA060, ZD012

Column	Description	Value	Value Meaning	Applicable F_Code for Each Attribute Value
HGT	Height Above Surface Level (meters)			
		0	Unknown	BI020
		3	Default if HGT <5 m	BI020
		>=5 to <=998		BI020
		-MAXINT	Null	AQ111, BI030, BH070, SA060, ZD012
LEN	Length/Diameter (meters)			
		0	Unknown	BI020, BI030
		>=100 to <=998		BI030
		>=100 to <=99998	Captured if HGT >=5 m	BI020
		-MAXINT	Null	AQ111, BH070, SA060, ZD012
MCC	Material Composition Category			
		0	Unknown	BI020
		21	Concrete, use if HGT >=5 m	BI020
		30	Earthen, use if HGT >=5 m	BI020
		108	Stone, use if HGT >=5 m	BI020
		999	Other, use if HGT >=5 m	BI020
		-MAXINT	Null	AQ111, BI030, BH070, SA060, ZD012
TXT	Text Attribute			
		Zero length VLT	Null	AQ111, BH070, BI020, BI030, SA060
		Character String		ZD012
WD5	Width Top (meters)			
		0	Unknown	BI020
		>0 to <=100	Used if HGT >=5 m	BI020
		-MAXINT	Null	AQ111, BI030, BH070, SA060, ZD012

Column	Description	Value	Value Meaning	Applicable F_Code for Each Attribute Value
WID	Width (meters)			
		0	Unknown	BI030
		>0 to <=100		BI030
		-MAXINT	Null	AQ111, BI020, BH070, SA060, ZD012

TABLE 64. Surface drainage node feature table.

```
{Header Length}L;
SDRNODE.PFT,Surface Drainage Node Feature Table;-;
ID=I,1,P,Row Identifier,-,-,-:
CND_ID=I,1,N,Connected Node Primitive Foreign Key,-,-,-,:
F_CODE=T,5,N,FACC Feature Code,CHAR.VDT,F_CODE1.PTI,-,:
EXS=I,1,N,Existence Category,INT.VDT,-,-,:
HGT=I,1,N,Height Above Surface Level (meters),INT.VDT,-,-,:
LEN=I,1,N,Length/Diameter (meters),INT.VDT,-,-,:
MCC=I,1,N,Material Composition Category,INT.VDT,-,-,:
TXT=T,*,N,Text Attribute,-,-,-,:
WD5=I,1,N,Width Top (meters),INT.VDT,-,-:
WID=I,1,N,Width (meters),INT.VDT,-,-,:;
```

A.6.3.4.5 Surface drainage node attribute definitions.

Column	Description	Value	Value Meaning	Applicable F_Code for Each Attribute Value
ID	Row Identifier	Sequential beginning with 1		
F_CODE	FACC Feature Code			
		AQ111	Prepared Raft or Float Bridge Site	
		BH070	Ford	
		BI020	Dam	
		BI030	Lock	
		ZD012	Geographic Information Point	
EXS	Existence Category			
		0	Unknown	BI020, BI030
		1	Definite	BI020, BI030

Column	Description	Value	Value Meaning	Applicable F_Code for Each Attribute Value
		5	Under Construction	BI020, BI030
		-MAXINT	Null	AQ111, BH070, ZD012
HGT	Height Above Surface Level (meters)			
		0	Unknown	BI020
		3	Default if HGT <5 m	BI020
		>=5 to <=998		BI020
		-MAXINT	Null	AQ111, BI030, BH070, ZD012
LEN	Length/Diameter (meters)			
		0	Unknown	BI020, BI030
		>0 to <=99		BI030
		>0 to <=99	Captured if HGT >=5 m	BI020
		-MAXINT	Null	AQ111, BH070, ZD012
MCC	Material Composition Category			
		0	Unknown	BI020
		21	Concrete, use if HGT >=5 m	BI020
		30	Earthen, use if HGT >=5 m	BI020
		108	Stone, use if HGT >=5 m	BI020
		999	Other, use if HGT >=5 m	BI020
		-MAXINT	Null	AQ111, BI030, BH070, ZD012
TXT	Text Attribute			
		Zero length	Null	AQ111, BH070,
		VLT		BI020, BI030
		Character String		ZD012
WD5	Width Top (meters)			
		0	Unknown	BI020
		>0 to <=100	Used if HGT >=5 m	BI020
		-MAXINT	Null	AQ111, BI030, BH070, ZD012

Column	Description	Value	Value Meaning	Applicable F_Code for Each Attribute Value
WID	Width (meters)			
		0	Unknown	BI030
		>0 to <=100		BI030
		-MAXINT	Null	AQ111, BI020, BH070, ZD012

TABLE 65. Surface drainage point feature table.

```
{Header Length}L;
SDRPOINT.PFT,Surface Drainage Point Feature Table;-;
ID=I,1,P,Row Identifier,-,-,-,:
END_ID=I,1,N,Entity Node Primitive Foreign Key,-,-,-,:
F_CODE=T,5,N,FACC Feature Code,CHAR.VDT,-,-,:
EXS=I,1,N,Existence Category,INT.VDT,-,-,:
HGT=I,1,N,Height Above Surface Level (meters),INT.VDT,-,-,:
LEN=I,1,N,Length/Diameter (meters),INT.VDT,-,-,:
MCC=I,1,N,Material Composition Category,INT.VDT,-,-,:
WD5=I,1,N,Width Top (meters),INT.VDT,-,-,:;
```

NOTE: No thematic index is used on F_CODE column, since only one feature is present in feature class.

A.6.3.4.6 Surface drainage point attribute definitions.

Column	Description	Value	Value Meaning	Applicable F_Code for Each Attribute Value
ID	Row Identifier	Sequential beginning with 1		
F_CODE	FACC Feature Code			
		BI020	Dam	
EXS	Existence Category			
		0	Unknown	BI020
		1	Definite	BI020
		5	Under Construction	BI020
HGT	Height Above Surface Level (meters)			
		0	Unknown	BI020
		3	Default if HGT <5 m	BI020
		>=5 to <=998		BI020

Column	Description	Value	Value Meaning	Applicable F_Code for Each Attribute Value
LEN	Length/Diameter (meters)			
		0	Unknown	BI020
		>0 to <=99	Captured if HGT >=5 m	BI020
MCC	Material Composition Category			
		0	Unknown	BI020
		21	Concrete, use if HGT >=5 m	BI020
		30	Earthen, use if HGT >=5 m	BI020
		108	Stone, use if HGT >=5 m	BI020
		999	Other, use if HGT >=5 m	BI020
WD5	Width Top (meters)			
		0	Unknown	BI020
		>0 to <=100	Used if HGT >=5 m	BI020

TABLE 66. Surface drainage feature class attribute table.

{Header Length}L;			
Surface Drainage Feature Class Attribute Table;-;			
ID=I,1,P,Row Identifier,-,-,-,:			
FCLASS=T,8,U,Feature Class Name,-,-,-,:			
TYPE=T,1,N,Feature Type,CHAR.VDT,-,-,:			
DESCR=T,*,N,Description,-,-,-,:;			
1	SDCAREA	A	Canal and River Area
2	SDRAREA	A	Open Water and Island
3	SDCLINE	L	Canal and River Line
4	SDRLINE	L	Dams, Fords, and Locks on Area
5	SDRNODE	P	Dams, Fords, and Locks on Line
6	SDRPOINT	P	Dams on Area

Column	Description	Value	Value Meaning	Applicable Feature Class for Each Attribute Value
ID	Row Identifier	Sequential beginning with 1		
FCLASS	Feature Class Name			
		SDCAREA		
		SDRAREA		
		SDCLINE		
		SDRLINE		
		SDRNODE		
		SDRPOINT		

Column	Description	Value	Value Meaning	Applicable Feature Class for Each Attribute Value
TYPE	Feature Type			
		A	Area Feature	SDCAREA, SDRAREA
		L	Line Feature	SDCLINE, SDRLINE
		P	Node Feature	SDRNODE
		P	Point Feature	SDRPOINT
DESCR	Description			
		Canal and River Area		SDCAREA
		Open Water and Island		SDRAREA
		Canal and River Line		SDCLINE
		Dams, Fords, and Locks on Area		SDRLINE
		Dams, Fords, and Locks on Line		SDRNODE
		Dams on Area		SDRPOINT

TABLE 67. Surface drainage character value description table.

{Header Length}L;
CHAR.VDT,Surface Drainage Character Value Description Table;-;
ID=I,1,P,Row Identifier,-,-,-,:
TABLE=T,12,N,Feature Class Table Name,-,-,-,:
ATTRIBUTE=T,6,N,Attribute Name,-,-,-,:
VALUE=T,5,N,Attribute Value,-,-,-,:
DESCRIPTION=T,50,N,Attribute Value Description,-,-,-,:;

1	SDRAREA.AFT	F_CODE	BA030	Island
2	SDRAREA.AFT	F_CODE	SA010	Common Open Water
3	SDRAREA.AFT	F_CODE	ZD012	Geographic Information Point
4	SDCAREA.AFT	F_CODE	BH020	Canal
5	SDCAREA.AFT	F_CODE	BH140	River/Stream
6	SDCAREA.AFT	F_CODE	DB200	Gully/Gorge
7	SDRLINE.LFT	F_CODE	AQ111	Prepared Raft or Float Bridge Site
8	SDRLINE.LFT	F_CODE	BH070	Ford
9	SDRLINE.LFT	F_CODE	BI020	Dam
10	SDRLINE.LFT	F_CODE	BI030	Lock
11	SDRLINE.LFT	F_CODE	SA060	Covered Drainage
12	SDRLINE.LFT	F_CODE	ZD012	Geographic Information Point
13	SDCLINE.LFT	F_CODE	BH020	Canal
14	SDCLINE.LFT	F_CODE	BH140	River/Stream
15	SDCLINE.LFT	F_CODE	DB200	Gully/Gorge

the international agreement specification is proposed that will modify t

TABLE 67. Surface drainage character value description table - Continued.

16	SDRNODE.PFT	F_CODE	AQ111	Prepared Raft or Float Bridge Site
17	SDRNODE.PFT	F_CODE	BH070	Ford
18	SDRNODE.PFT	F_CODE	BI020	Dam
19	SDRNODE.PFT	F_CODE	BI030	Lock
20	SDRNODE.PFT	F_CODE	ZD012	Geographic Information Point
21	SDRPOINT.PFT	F_CODE	BI020	Dam
22	FCA	TYPE	A	Area Feature
23	FCA	TYPE	L	Line Feature
24	FCA	TYPE	P	Point/Node Feature

A.6.3.4.7 Surface drainage coverage glossary.

AREA FEATURES

BA030 Island A land mass smaller than a continent and surrounded by water.

BH020 Canal A man-made or improved natural waterway used for transportation.
BGL Bank Gradient Left Slope of the left bank above water level (facing downstream). In this product default values represent ranges.
BGR Bank Gradient Right Slope of the right bank above water level (facing downstream). In this product default values represent ranges.
BHL Bank Height Left (decimeters) Height of the left bank above the water level (facing downstream) to the average water level. In this product default values represent ranges in decimeters.
BHR Bank Height Right (decimeters) Height of the right bank above the water level (facing downstream) to the average water level. In this product default values represent ranges in decimeters.
BVL Bank Vegetation Left Density of vegetation found on the downstream left bank.
BVR Bank Vegetation Right Density of vegetation found on the downstream right bank.
MCC Material Composition Category Composition material, excluding surface material.
WD3 Military Gap Width (decimeters) The minimum horizontal bridging distance between banks. In this product default values represent ranges in decimeters.
WDA Water Depth Average (meters) The average water depth (in meters). In this product coded values represent ranges.
WVA Water Velocity Average (meters/second) Average velocity of the stream. In this product coded values are implemented.

BH140 River/Stream A natural flowing watercourse.
BGL Bank Gradient Left Slope of the left bank above water level (facing downstream). In this product default values represent ranges.
BGR Bank Gradient Right Slope of the right bank above water level (facing downstream). In this product default values represent ranges.
BHL Bank Height Left (decimeters) Height of the left bank above the water level (facing downstream) to the average water level. In this product default values represent ranges in decimeters.
BHR Bank Height Right (decimeters) Height of the right bank above the water level (facing downstream) to the average water level. In this product default values represent ranges in decimeters.
BVL Bank Vegetation Left Density of vegetation found on the downstream left bank.
BVR Bank Vegetation Right Density of vegetation found on the downstream right bank.
TID Tidal/Non-Tidal Category Identifies whether a feature is affected by tidal water.
MCC Material Composition Category Composition material, excluding surface material.
HYC Hydrological Category Identifies the annual water content of the feature.
WD3 Military Gap Width (decimeters) The minimum horizontal bridging distance between banks. In this product default values represent ranges in decimeters.
WDA Water Depth Average (meters) The average water depth (in meters). In this product coded values represent ranges.
WVA Water Velocity Average (meters/second) Average velocity of the stream. In this product coded values are implemented.

DB200 Gully/Gorge A long, narrow, deep erosion with steep banks.
BGL Bank Gradient Left Slope of the left bank above water level (facing downstream). In this product default values represent ranges.
BGR Bank Gradient Right Slope of the right bank above water level (facing downstream). In this product default values represent ranges.
BHL Bank Height Left (decimeters) Height of the left bank above the water level (facing downstream) to the average water level. In this product default values represent ranges in decimeters.
BHR Bank Height Right (decimeters) Height of the right bank above the water level (facing downstream) to the average water level. In this product default values represent ranges in decimeters.
BVL Bank Vegetation Left Density of vegetation found on the downstream left bank.
BVR Bank Vegetation Right Density of vegetation found on the downstream right bank.
MCC Material Composition Category Composition material, excluding surface material.

WD3 Military Gap Width (decimeters) The minimum horizontal bridging distance between banks. In this product default values represent ranges (in decimeters).
WDA Water Depth Average (meters) The average water depth (in meters). In this product coded values represent ranges.
WVA Water Velocity Average (meters/second) Average velocity of the stream. In this product coded values are implemented.

SA010 Common Open Water An area containing any surface water that is flowing or free standing such as lakes, rivers, oceans, reservoirs, etc.

ZD012 Geographic Information Point A location where geographic information or statistics may apply. (A feature of military significance and not captured by any other FACC code).
TXT Text Attribute Narrative or other description.

LINE FEATURES

AQ111 Prepared Raft or Float Bridge Site Site on a river or canal which has ramp, piling, and/or pier structures constructed on one or both shores, to allow for suitable future crossing operations using float bridge or rafting equipment.

BH020 Canal A man-made or improved natural waterway used for transportation.
BGL Bank Gradient Left Slope of the left bank above water level (facing downstream). In this product default values represent ranges.
BGR Bank Gradient Right Slope of the right bank above water level (facing downstream). In this product default values represent ranges.
BHL Bank Height Left (decimeters) Height of the left bank above the water level (facing downstream) to the average water level. In this product default values represent ranges in decimeters.
BHR Bank Height Right (decimeters) Height of the right bank above the water level (facing downstream) to the average water level. In this product default values represent ranges in decimeters.
BVL Bank Vegetation Left Density of vegetation found on the downstream left bank.
BVR Bank Vegetation Right Density of vegetation found on the downstream right bank.
MCC Material Composition Category Composition material, excluding surface material.
WD3 Military Gap Width (decimeters) The minimum horizontal bridging distance between banks. In this product default values represent ranges (in decimeters).
WDA Water Depth Average (meters) The average water depth (in meters). In this product coded values represent ranges.
WVA Water Velocity Average (meters/second) Average velocity of the stream. In this product coded values are implemented.

BH070 Ford A shallow place in a body of water used as a crossing.

BH140 River/Stream A natural flowing watercourse.
BGL Bank Gradient Left Slope of the left bank above water level (facing downstream). In this product default values represent ranges.
BGR Bank Gradient Right Slope of the right bank above water level (facing downstream). In this product default values represent ranges.
BHL Bank Height Left (decimeters) Height of the left bank above the water level (facing downstream) to the average water level. In this product default values represent ranges in decimeters.
BHR Bank Height Right (decimeters) Height of the right bank above the water level (facing downstream) to the average water level. In this product default values represent ranges in decimeters.
BVL Bank Vegetation Left Density of vegetation found on the downstream left bank.
BVR Bank Vegetation Right Density of vegetation found on the downstream right bank.
HYC Hydrological Category Identifies the annual water content of the feature.
MCC Material Composition Category Composition material, excluding surface material.
TID Tidal/Non-Tidal Category Identifies whether a feature is affected by tidal water.
WD3 Military Gap Width (decimeters) The minimum horizontal bridging distance between banks (in decimeters). In this product default values represent ranges.
WDA Water Depth Average (meters) The average water depth (in meters). In this product coded values represent ranges.
WVA Water Velocity Average (meters/second) Average velocity of the stream. In this product coded values are implemented.

BI020 Dam A permanent barrier across a watercourse used to impound water or to control its flow.
EXS Existence Category The state or condition of the feature.
HGT Height Above Surface Level (meters) Distance measured from the lowest point of the base at ground or water level (downhill side/downstream side) to the tallest point of the feature.
LEN Length/Diameter (meters) A measurement of the longer of two linear axes (in meters). For a square feature, measure either axis. For a round feature, measure the diameter.
MCC Material Composition Category Composition material, excluding surface material.
WD5 Width Top (meters) The width at the top of the feature (in meters).

BI030 Lock An enclosure, with a pair of gates controlling the water level, used for raising or lowering vessels as they pass from one water level to another.

EXS Existence Category The state or condition of the feature.
LEN Length/Diameter (meters) A measurement of the longer of two linear axes (in meters). For a square feature, measure either axis. For a round feature, measure the diameter.
WID Width (meters) A measurement of the shorter of two linear axes on the horizontal plane. For a square feature, measure either axis.

DB200 Gully/Gorge A long, narrow, deep erosion with steep banks.
BGL Bank Gradient Left Slope of the left bank above water level (facing downstream). In this product default values represent ranges.
BGR Bank Gradient Right Slope of the right bank above water level (facing downstream). In this product default values represent ranges.
BHL Bank Height Left (decimeters) Height of the left bank above the water level (facing downstream) to the average water level. In this product default values represent ranges in decimeters.
BHR Bank Height Right (decimeters) Height of the right bank above the water level (facing downstream) to the average water level. In this product default values represent ranges in decimeters.
BVL Bank Vegetation Left Density of vegetation found on the downstream left bank.
BVR Bank Vegetation Right Density of vegetation found on the downstream right bank.
MCC Material Composition Category Composition material, excluding surface material.
WD3 Military Gap Width (decimeters) The minimum horizontal bridging distance between banks. In this product default values represent ranges in decimeters.
WDA Water Depth Average (meters) The average water depth (in meters). In this product coded values represent ranges.
WVA Water Velocity Average (meters/second) Average velocity of the stream. In this product coded values are implemented.

SA060 Covered Drainage A natural watercourse or man-made waterway that is covered preventing its observation or further classification.
ACC Accuracy Category The relative accuracy of geographic location.

ZD012 Geographic Information Point A location where geographic information or statistics may apply.(A feature of military significance and not captured by any other FACC code).
TXT Text Attribute Narrative or other description.

NODE FEATURES

AQ111 Prepared Raft or Float Bridge Site Site on a river or canal which has ramp, piling, and/or pier structures constructed on one or both shores, to allow for suitable future crossing operations using float bridge or rafting equipment.

BH070 Ford A shallow place in a body of water used as a crossing.

BI030 Lock An enclosure, with a pair of gates controlling the water level, used for raising or lowering vessels as they pass from one water level to another.
EXS Existence Category The state or condition of the feature.
LEN Length/Diameter (meters) A measurement of the longer of two linear axes (in meters). For a square feature, measure either axis. For a round feature, measure the diameter.
WID Width (meters) A measurement of the shorter of two linear axes on the horizontal plane (in meters). For a square feature, measure either axis.

ZD012 Geographic Information Point A location where geographic information or statistics may apply.(A feature of military significance and not captured by any other FACC code).
TXT Text Attribute Narrative or other description.

POINT FEATURES

BI020 Dam A permanent barrier across a watercourse used to impound water or to control its flow.
EXS Existence Category The state or condition of the feature.
HGT Height Above Surface Level (meters) Distance measured from the lowest point of the base at ground or water level (downhill side/downstream side) to the tallest point of the feature.
LEN Length/Diameter (meters) A measurement of the longer of two linear axes (in meters). For a square feature, measure either axis. For a round feature, measure the diameter.
MCC Material Composition Category Composition material, excluding surface material.
WD5 Width Top (meters) The width at the top of the feature (in meters).

TABLE 68. Surface drainage integer value description table.

{Header Length}L;
INT.VDT,Surface Drainage Integer Value Description Table;-;
ID=I,1,P,Row Identifier,-,-,-,:
TABLE=T,12,N,Feature Class Table Name,-,-,-,:
ATTRIBUTE=T,3,N,Attribute Name,-,-,-,:
VALUE=I,1,N,Attribute Value,-,-,-,:
DESCRIPTION=T,50,N,Attribute Value Description,-,-,-,:;

1	SDCAREA.AFT	BGL	000	Unknown
2	SDCAREA.AFT	BGL	12	0 to <30%
3	SDCAREA.AFT	BGL	38	=>30% to <45%
4	SDCAREA.AFT	BGL	52	=>45% to <60%
5	SDCAREA.AFT	BGL	80	=>60%
6	SDCAREA.AFT	BGR	000	Unknown
7	SDCAREA.AFT	BGR	12	0 to ><30%
8	SDCAREA.AFT	BGR	38	=>30% to <45%
9	SDCAREA.AFT	BGR	52	=>45% to <60%
10	SDCAREA.AFT	BGR	80	=>60%
11	SDCAREA.AFT	BHL	000	Unknown
12	SDCAREA.AFT	BHL	2	>0.0 to <=0.5 m
13	SDCAREA.AFT	BHL	8	>0.5 m to <=1.0 m
14	SDCAREA.AFT	BHL	30	>1.0 m to <=5.0 m
15	SDCAREA.AFT	BHL	75	>5.0 m
16	SDCAREA.AFT	BHR	000	Unknown
17	SDCAREA.AFT	BHR	2	>0.0 to <=0.5 m
18	SDCAREA.AFT	BHR	8	>0.5 m to <=1.0 m
19	SDCAREA.AFT	BHR	30	>1.0 m to <=5.0 m
20	SDCAREA.AFT	BHR	75	>5.0 m
21	SDCAREA.AFT	BVL	000	Unknown
22	SDCAREA.AFT	BVL	2	Sparse (>5% to <=15%)
23	SDCAREA.AFT	BVL	4	Dense (>50%)
24	SDCAREA.AFT	BVR	000	Unknown
25	SDCAREA.AFT	BVR	2	Sparse (>5% to <=15%)
26	SDCAREA.AFT	BVR	4	Dense (>50%)
27	SDCAREA.AFT	HYC	000	Unknown
28	SDCAREA.AFT	HYC	6	Non-Perennial/Intermittent/ Fluctuating
29	SDCAREA.AFT	HYC	8	Perennial/Permanent
30	SDCAREA.AFT	HYC	14	Braided
31	SDCAREA.AFT	MCC	000	Unknown
32	SDCAREA.AFT	MCC	5	Asphalt
33	SDCAREA.AFT	MCC	7	Bedrock
34	SDCAREA.AFT	MCC	16	Clay
35	SDCAREA.AFT	MCC	46	Gravel

TABLE 68. Surface drainage integer value description table - Continued.

36	SDCAREA.AFT	MCC	84	Rock/Rocky
37	SDCAREA.AFT	MCC	88	Sand
38	SDCAREA.AFT	MCC	99	Silt
39	SDCAREA.AFT	TID	000	Unknown
40	SDCAREA.AFT	TID	2	Tidal/Tidal Fluctuating
41	SDCAREA.AFT	WDA	000	Unknown
42	SDCAREA.AFT	WDA	1	>0.0 to <=0.8 m
43	SDCAREA.AFT	WDA	2	>0.8 m to <=1.6 m
44	SDCAREA.AFT	WDA	3	>1.6 m to <=2.4 m
45	SDCAREA.AFT	WDA	4	>2.4 m
46	SDCAREA.AFT	WD3	000	Unknown
47	SDCAREA.AFT	WD3	340	>180 dm to <=500 dm
48	SDCAREA.AFT	WD3	750	>500 dm to <=1000 dm
49	SDCAREA.AFT	WD3	1210	>1000 dm to <=1420 dm
50	SDCAREA.AFT	WD3	1710	>1420 dm
51	SDCAREA.AFT	WVA	000	Unknown
52	SDCAREA.AFT	WVA	1	>0.0 to <=1.5 m/sec
53	SDCAREA.AFT	WVA	2	>1.5 m/sec
54	SDRLINE.LFT	ACC	000	Unknown
55	SDRLINE.LFT	ACC	1	Accurate
56	SDRLINE.LFT	ACC	2	Approximate
57	SDRLINE.LFT	EXS	000	Unknown
58	SDRLINE.LFT	EXS	1	Definite
59	SDRLINE.LFT	EXS	5	Under Construction
60	SDRLINE.LFT	HGT	000	Unknown
61	SDRLINE.LFT	HGT	3	Default if <5 m
62	SDRLINE.LFT	LEN	000	Unknown
63	SDRLINE.LFT	MCC	000	Unknown
64	SDRLINE.LFT	MCC	21	Concrete
65	SDRLINE.LFT	MCC	30	Earthen
66	SDRLINE.LFT	MCC	108	Stone
67	SDRLINE.LFT	MCC	999	Other
68	SDRLINE.LFT	WD5	000	Unknown
69	SDRLINE.LFT	WID	000	Unknown
70	SDCLINE.LFT	BGL	000	Unknown
71	SDCLINE.LFT	BGL	12	0 to <30%
72	SDCLINE.LFT	BGL	38	=>30% to <45%
73	SDCLINE.LFT	BGL	52	=>45% to <60%
74	SDCLINE.LFT	BGL	80	=>60%
75	SDCLINE.LFT	BGR	000	Unknown
76	SDCLINE.LFT	BGR	12	0 to <30%
77	SDCLINE.LFT	BGR	38	=>30% to <45%

TABLE 68. Surface drainage integer value description table - Continued.

78	SDCLINE.LFT	BGR	52	=>45% to <60%
79	SDCLINE.LFT	BGR	80	=>60%
80	SDCLINE.LFT	BHL	000	Unknown
81	SDCLINE.LFT	BHL	2	>0.0 to <=0.5 m
82	SDCLINE.LFT	BHL	8	>0.5 m to <=1.0 m
83	SDCLINE.LFT	BHL	30	>1.0 m to <=5.0 m
84	SDCLINE.LFT	BHL	75	>5.0 m
85	SDCLINE.LFT	BHR	000	Unknown
86	SDCLINE.LFT	BHR	2	>0.0 to <=0.5 m
87	SDCLINE.LFT	BHR	8	>0.5 m to <=1.0 m
88	SDCLINE.LFT	BHR	30	>1.0 m to <=5.0 m
89	SDCLINE.LFT	BHR	75	>5.0 m
90	SDCLINE.LFT	BVL	000	Unknown
91	SDCLINE.LFT	BVL	2	Sparse (>5% to <=15%)
92	SDCLINE.LFT	BVL	4	Dense (>50%)
93	SDCLINE.LFT	BVR	000	Unknown
94	SDCLINE.LFT	BVR	2	Sparse (>5% to <=15%)
95	SDCLINE.LFT	BVR	4	Dense (>50%)
96	SDCLINE.LFT	HYC	000	Unknown
97	SDCLINE.LFT	HYC	6	Non-Perennial/Intermittent/ Fluctuating
98	SDCLINE.LFT	HYC	8	Perennial/Permanent
99	SDCLINE.LFT	HYC	14	Braided
100	SDCLINE.LFT	MCC	000	Unknown
101	SDCLINE.LFT	MCC	5	Asphalt
102	SDCLINE.LFT	MCC	7	Bedrock
103	SDCLINE.LFT	MCC	16	Clay
104	SDCLINE.LFT	MCC	46	Gravel
105	SDCLINE.LFT	MCC	84	Rock/Rocky
106	SDCLINE.LFT	MCC	88	Sand
107	SDCLINE.LFT	MCC	99	Silt
108	SDCLINE.LFT	TID	000	Unknown
109	SDCLINE.LFT	TID	2	Tidal/Tidal Fluctuating
110	SDCLINE.LFT	WDA	000	Unknown
111	SDCLINE.LFT	WDA	1	>0.0 to <=0.8 m
112	SDCLINE.LFT	WDA	2	>0.8 m to <=1.6 m
113	SDCLINE.LFT	WDA	3	>1.6 m to <=2.4 m
114	SDCLINE.LFT	WDA	4	>2.4 m
115	SDCLINE.LFT	WD3	000	Unknown
116	SDCLINE.LFT	WD3	20	>0 to <=45 dm
117	SDCLINE.LFT	WD3	113	>45 dm to <=180 dm
118	SDCLINE.LFT	WVA	000	Unknown

TABLE 68. Surface drainage integer value description table - Continued.

119	SDCLINE.LFT	WVA	1	>0.0 to <=1.5 m/sec
120	SDCLINE.LFT	WVA	2	>1.5 m/sec
121	SDRPOINT.PFT	EXS	000	Unknown
122	SDRPOINT.PFT	EXS	1	Definite
123	SDRPOINT.PFT	EXS	5	Under Construction
124	SDRPOINT.PFT	HGT	000	Unknown
125	SDRPOINT.PFT	HGT	3	Default if <5 m
126	SDRPOINT.PFT	LEN	000	Unknown
127	SDRPOINT.PFT	MCC	000	Unknown
128	SDRPOINT.PFT	MCC	21	Concrete
129	SDRPOINT.PFT	MCC	30	Earthen
130	SDRPOINT.PFT	MCC	108	Stone
131	SDRPOINT.PFT	MCC	999	Other
132	SDRPOINT.PFT	WD5	000	Unknown
133	SDRNODE.PFT	EXS	000	Unknown
134	SDRNODE.PFT	EXS	1	Definite
135	SDRNODE.PFT	EXS	5	Under Construction
136	SDRNODE.PFT	HGT	000	Unknown
137	SDRNODE.PFT	HGT	3	Default if <5 m
138	SDRNODE.PFT	LEN	000	Unknown
139	SDRNODE.PFT	MCC	000	Unknown
140	SDRNODE.PFT	MCC	21	Concrete
141	SDRNODE.PFT	MCC	30	Earthen
142	SDRNODE.PFT	MCC	108	Stone
143	SDRNODE.PFT	MCC	999	Other
144	SDRNODE.PFT	WD5	000	Unknown
145	SDRNODE.PFT	WID	000	Unknown

A.6.3.5 Transportation coverage.

a. The Feature Class Schema table creates the relationship between the feature class and primitive tables as shown in TABLE 69. This coverage contains areal, linear, and node features relating to roads, railroads, bridges, tunnels, and runways. Area, line, node, join, and feature class attribute tables are presented in TABLES 70 thru 81. Feature join tables are used for linear and area feature classes where a feature may contain multiple primitives. The join relationships will be based entirely on how the data was originally compiled; no new processing or regrouping of the affected features will be performed. A coincident feature, many features sharing one primitive, may exist with the node bridge feature class, where both the bridge and associated spans are node features. The Feature Class Attribute (FCA) table is represented in TABLE 82. The value description tables for the transportation coverage are provided in TABLES 83 and 84.

b. Where roads and railroads have associated linear bridges, tunnels, ferries, and fords, only those transportation 'connectors' features are represented. The road or railroad terminates at those features and must be linked with the appropriate features through the topological relationship of the primitive.

TABLE 69. Transportation feature class schema table (FCS).

```
{Header Length}L;
Transportation Feature Class Schema Table;-;
ID=I,1,P,Row Identifier,-,-,-,:
FEATURE_CLASS=T,8,N,Name of Feature Class,-,-,-,:
TABLE1=T,12,N,First Table in a Relationship,-,-,-,:
TABLE1_KEY=T,16,N,Column Name in First Table,-,-,-,:
TABLE2=T,12,N,Second Table in a Relationship,-,-,-,:
TABLE2_KEY=T,16,N,Column Name in Second Table,-,-,-,:;
```

1	TRNAREA	TRNAREA.AFT	ID	TRNAREA.AJT	TRNAREA.AFT_ID
2	TRNAREA	TRNAREA.AJT	FAC_ID	FAC	ID
3	TRNAREA	FAC	ID	TRNAREA.AJT	FAC_ID
4	TRNAREA	TRNAREA.AJT	TRNAREA.AFT_ID	TRNAREA.AFT	ID
5	TRBLINE	TRBLINE.LFT	ID	TRBLINE.LJT	TRBLINE.LFT_ID
6	TRBLINE	TRBLINE.LJT	EDG_ID	EDG	ID
7	TRBLINE	EDG	ID	TRBLINE.LJT	EDG_ID
8	TRBLINE	TRBLINE.LJT	TRBLINE.LFT_ID	TRBLINE.LFT	ID
9	TRDLINE	TRDLINE.LFT	ID	TRDLINE.LJT	TRDLINE.LFT_ID
10	TRDLINE	TRDLINE.LJT	EDG_ID	EDG	ID
11	TRDLINE	EDG	ID	TRDLINE.LJT	EDG_ID
12	TRDLINE	TRDLINE.LJT	TRDLINE.LFT_ID	TRDLINE.LFT	ID
13	TRNLINE	TRNLINE.LFT	ID	TRNLINE.LJT	TRNLINE.LFT_ID
14	TRNLINE	TRNLINE.LJT	EDG_ID	EDG	ID
15	TRNLINE	EDG	ID	TRNLINE.LJT	EDG_ID
16	TRNLINE	TRNLINE.LJT	TRNLINE.LFT_ID	TRNLINE.LFT	ID
17	TRRLINE	TRRLINE.LFT	ID	TRRLINE.LJT	TRRLINE.LFT_ID
18	TRRLINE	TRRLINE.LJT	EDG_ID	EDG	ID
19	TRRLINE	EDG	ID	TRRLINE.LJT	EDG_ID
20	TRRLINE	TRRLINE.LJT	TRRLINE.LFT_ID	TRRLINE.LFT	ID
21	TRBDGND	TRBDGND.PFT	CND_ID	CND	ID
22	TRBDGND	CND	ID	TRBDGND.PFT	CND_ID
23	TRNNODE	TRNNODE.PFT	CND_ID	CND	ID
24	TRNNODE	CND	ID	TRNNODE.PFT	CND_ID

TABLE 70. Transportation area feature table.

```
{Header Length}L;
TRNAREA.AFT,Transportation Area Feature Table;-;
ID=I,1,P,Row Identifier,-,-,-,:
F_CODE=T,5,N,FACC Feature Code,CHAR.VDT,F_CODE1.ATI,-,:
CTL=I,1,N,Cumulative Track Length (meters),INT.VDT,-,-,:
EXS=I,1,N,Existence Category,INT.VDT,-,-,:
FCO=I,1,N,Feature Configuration,INT.VDT,-,-,:
LEN=I,1,N,Length/Diameter (meters),INT.VDT,-,-,:
RRA=I,1,N,Railroad Power Source,INT.VDT,-,-,:
RRC=I,1,N,Railroad Categories,INT.VDT,-,:
RST=I,1,N,Road/Runway Surface Type,INT.VDT,-,-,:
TXT=T,*,N,Text Attribute,-,-,-,:
WID=I,1,N,Width (meters),INT.VDT,-,-,:;
```

TABLE 71. Transportation area join table.

```
{Header Length}L;
TRNAREA.AJT,Transportation Area Join Table;-;
ID=I,1,P,Row Identifier,-,-,-,:
TRNAREA.AFT_ID=I,1,N,Feature Key,-,TRNAREA1.JTI,-,:
FAC_ID=I,1,N,Primitive Key,-,FAC1.JTI,-,:;
```

NOTE: This table is used to combine area transportation features, such as railroad yards, with their associated face primitives in a one-to-many relationship.

A.6.3.5.1 Transportation area attribute definitions.

Column	Description	Value	Value Meaning	Applicable F_Code for Each Attribute Value
ID	Row Identifier	Sequential beginning with 1		
F_CODE	FACC Feature Code			
		AN060	Railroad Yard/ Marshalling Yard	
		GB055	Runway	
		ZD012	Geographic Information Point	
CTL	Cumulative Track Length (meters)			
		0	Unknown	AN060
		>0 to <=99998		AN060
		-MAXINT	Null	GB055, ZD012

Column	Description	Value	Value Meaning	Applicable F_Code for Each Attribute Value
EXS	Existence Category			
		0	Unknown	AN060, GB055
		1	Definite	AN060, GB055
		5	Under Construction	AN060, GB055
		6	Abandoned/Disused	GB055
		-MAXINT	Null	ZD012
FCO	Feature Configuration			
		0	Unknown	GB055
		8	Poorly Defined	GB055
		9	Well Defined	GB055
		-MAXINT	Null	AN060, ZD012
LEN	Length/Diameter (meters)			
		0	Unknown	GB055
		>0 to <=5000		GB055
		-MAXINT	Null	AN060, ZD012
RRA	Railroad Power Source			
		0	Unknown	AN060
		1	Electrified Track	AN060
		4	Non-electrified	AN060
		-MAXINT	Null	GB055, ZD012
RRC	Railroad Categories			
		0	Unknown	AN060
		1	Broad Gauge	AN060
		4	Narrow/Narrow Gauge	AN060
		5	Normal (Standard) Gauge	AN060
		-MAXINT	Null	GB055, ZD012
RST	Road/Runway Surface Type			
		0	Unknown	GB055
		1	Hard/Paved	GB055
		2	Loose/Unpaved	GB055
		-MAXINT	Null	AN060, ZD012
TXT	Text Attribute			
		Zero length	Null	GB055, AN060
		VLT Character String		ZD012

Column	Description	Value	Value Meaning	Applicable F_Code for Each Attribute Value
WID	Width (meters)			
		0	Unknown	GB055
		>0 to <=300		GB055
		-MAXINT	Null	AN060, ZD012

TABLE 72. Transportation bridge line feature table.

```
{Header Length}L;
TRBLINE.LFT,Transportation Bridge Line Feature Table;-;
ID=I,1,P,Row Identifier,-,-,-,:
F_CODE=T,5,N,FACC Feature Code,CHAR.VDT,-,-,:
BCC=I,1,N,Bypass Condition Category,INT.VDT,-,-,:
BRN=I,1,N,Bridge Reference Number,INT.VDT,-,-,:
EXS=I,1,N,Existence Category,INT.VDT,-,-,:
LC1=I,1,N,Load Class Type 1 (tons),INT.VDT,-,-,:
LC2=I,1,N,Load Class Type 2 (tons),INT.VDT,-,-,:
LC3=I,1,N,Load Class Type 3 (tons),INT.VDT,-,-,:
LC4=I,1,N,Load Class Type 4 (tons),INT.VDT,-,-,:
NOS=I,1,N,Number of Spans,INT.VDT,-,-,:
OHC=I,1,N,Overhead Clearance Category (decimeters),INT.VDT,-,-,:
TUC=I,1,N,Transportation Use Category,INT.VDT,-,-,:
UBC=I,1,N,Underbridge Clearance Category (decimeters),INT.VDT,-,-,:
WD1=I,1,N,Minimum Travelled Way Width (decimeters),INT.VDT,-,-,:
LEN=I,1,N,Length/Diameter (meters),INT.VDT,-,-:;
```

TABLE 73. Bridge line join table.

```
{Header Length}L;
TRBLINE.LJT,Bridge Line Join Table;-;
ID=I,1,P,Row Identifier,-,-,-,:
TRBLINE.LFT_ID=I,1,N,Feature Key,-,TRBLINE1.JTI,-,:
EDG_ID=I,1,N,Primitive Key,-,EDG1.JTI,-,:;
```

NOTE: This table is used to combine linear bridge features with their associated primitives as a one-to-many relationship. This may be caused by the placement of multiple node bridge spans positioned on linear bridges.

A.6.3.5.2 Transportation bridge line attribute definitions.

Column	Description	Value	Value Meaning	Applicable F_Code for Each Attribute Value
ID	Row Identifier	Sequential beginning with 1		
F_CODE	FACC Feature Code			
		AQ040	Bridge/Overpass/Viaduct	
BCC	Bypass Condition Category			
		0	Unknown	AQ040 TUC<>3
		1	Easy	AQ040 TUC<>3
		2	Difficult	AQ040 TUC<>3
		3	Impossible	AQ040 TUC<>3
		-MAXINT	Null	AQ040 TUC=3
BRN	Bridge Reference Number			
		0	Unknown	AQ040
		>0	Relates bridge to span	AQ040
EXS	Existence Category			
		0	Unknown	AQ040
		1	Definite	AQ040
		5	Under Construction	AQ040
LC1	Load Class Type 1 (tons)			
		0	Unknown	AQ040 TUC<>3
		>0 to <=200		AQ040 TUC<>3
		-MAXINT	Null	AQ040 TUC=3
LC2	Load Class Type 2 (tons)			
		0	Unknown	AQ040 TUC<>3
		>0 to <=200		AQ040 TUC<>3
		-MAXINT	Null	AQ040 TUC=3
LC3	Load Class Type 3 (tons)			
		0	Unknown	AQ040 TUC<>3
		>0 to <=200		AQ040 TUC<>3
		-MAXINT	Null	AQ040 TUC=3
LC4	Load Class Type 4 (tons)			
		0	Unknown	AQ040
		>0 to <=200		AQ040
		-MAXINT	Null	AQ040 TUC=3
LEN	Length/Diameter (meters)			
		0	Unknown	AQ040
		>=1000 m to <=9998 m		AQ040

Column	Description	Value	Value Meaning	Applicable F_Code for Each Attribute Value
NOS	Number of Spans			
		0	Unknown	AQ040 TUC<>3
		>0 to <=98		AQ040 TUC<>3
		-MAXINT	Null	AQ040 TUC=3
OHC	Overhead Clearance Category (decimeters)			
		0	Unknown	AQ040
		>0 to <=500 dm		AQ040
		501 dm	Default for unlimited	AQ040
TUC	Transportation Use Category			
		0	Unknown	AQ040
		3	Railroad	AQ040
		4	Road	AQ040
UBC	Underbridge Clearance Category (decimeters)			
		0	Unknown	AQ040 TUC<>3
		>0 to <=998 dm (99.8 m)		AQ040 TUC<>3
		-MAXINT	Null	AQ040 TUC=3
WD1	Minimum Travelled Way Width (decimeters)			
		0	Unknown	AQ040 TUC<>3
		>0 to <=998 dm		AQ040 TUC<>3
		-MAXINT	Null	AQ040 TUC=3

TABLE 74. Transportation road line feature table.

```
{Header Length}L;
TRDLINE.LFT,Transportation Road Line Feature Table;-;
ID=I,1,P,Row Identifier,-,-,-,:
F_CODE=T,5,N,FACC Feature Code,CHAR.VDT,-,-,:
ACC=I,1,N,Accuracy Category,INT.VDT,-,-,:
EXS=I,1,N,Existence Category,INT.VDT,-,-,:
FCO=I,1,N,Feature Configuration,INT.VDT,-,-,:
LOC=I,1,N,Location Category,INT.VDT,-,-,:
RST=I,1,N,Road/Runway Surface Type,INT.VDT,-,-,:
SGC=I,1,N,Gradient/Slope (percent),INT.VDT,-,-,:
WD1=I,1,N,Minimum Travelled Way Width (decimeters),INT.VDT,-,-,:
WTC=I,1,N,Weather Type Category,INT.VDT,-,-,:;
```

TABLE 75. Road line join table.

```
{Header Length}L;
TRDLINE.LJT,Road Line Join Table;-;
ID=I,1,P,Row Identifier,-,-,-,:
TRDLINE.LFT_ID=I,1,N,Feature Key,-,TRDLINE2.JTI,-,:
EDG_ID=I,1,N,Primitive Key,-,EDG2.JTI,-,:;
```

NOTE: This table is used to combine linear railroad features with their associated primitives as a one-to-many relationship. Road relationships will be based entirely on how the data was originally collected; no new processing or re-grouping of these features will be performed.

A.6.3.5.3 Transportation road line attribute definitions.

Column	Description	Value	Value Meaning	Applicable F_Code for Each Attribute Value
ID	Row Identifier	Sequential beginning with 1		
F_CODE	FACC Feature Code	AP030	Road	
ACC	Accuracy Category			
		0	Unknown	AP030
		1	Accurate	AP030
		2	Approximate	AP030
EXS	Existence Category			
		0	Unknown	AP030
		1	Definite	AP030
		5	Under Construction	AP030
FCO	Feature Configuration			
		0	Unknown	AP030
		5	Divided same widths	AP030
		6	Divided different widths	AP030
		7	Non-divided	AP030
LOC	Location Category			
		0	Unknown	AP030
		8	On Ground Surface	AP030
		25	Suspended or Elevated Above Ground Surface or Water Surface	AP030
RST	Road/Runway Surface Type			
		0	Unknown	AP030
		1	Hard/Paved	AP030
		2	Loose/Unpaved	AP030

Column	Description	Value	Value Meaning	Applicable F_Code for Each Attribute Value
SGC	Gradient/Slope (percent)			
		0 to 98		AP030
		3	<7% Default for H/C	AP030
		8	>=7% Default for H/C	AP030
		999	Unknown	AP030
WD1	Minimum Travelled Way Width (decimeters)			
		0	Unknown	AP030
		>0 to <=500 dm		AP030
WTC	Weather Type Category			
		0	Unknown	AP030
		1	All Weather	AP030
		2	Fair/Dry Weather	AP030

TABLE 76. Transportation line feature table.

```
{Header Length}L;
TRNLINE.LFT,Transportation Line Feature Table;-;
ID=I,1,P,Row Identifier,-,-,-,:
F_CODE=T,5,N,FACC Feature Code,CHAR.VDT,F_CODE3.LTI,-,:
ACC=I,1,N,Accuracy Category,INT.VDT,-,-,:
EXS=I,1,N,Existence Category,INT.VDT,-,-,:
FCO=I,1,N,Feature Configuration,INT.VDT,-,-,:
LEN=I,1,N,Length/Diameter (meters),INT.VDT,-,-,:
OHC=I,1,N,Overhead Clearance Category (decimeters),INT.VDT,-,-,:
RST=I,1,N,Road/Runway Surface Type,INT.VDT,-,-,:
TUC=I,1,N,Transportation Use Category,INT.VDT,-,-,:
TXT=T,*,N,Text Attribute,-,-,-,:
WD1=I,1,N,Minimum Travelled Way Width (decimeters),INT.VDT,-,-,:
WID=I,1,N,Width (meters),INT.VDT,-,-,:;
```

TABLE 77. Transportation line join table.

```
{Header Length}L;
TRNLINE.LJT,Transportation Line Join Table;-;
ID=I,1,P,Row Identifier,-,-,-,:
TRNLINE.LFT_ID=I,1,N,Feature Key,-,TRNLINE3.JTI,-,:
EDG_ID=I,1,N,Primitive Key,-,EDG3.JTI,-,:;
```

NOTE: This table is used to combine linear transportation features, such as cart tracks and runways, with their associated edge primitives as a one-to-many relationship.

A.6.3.5.4 Transportation line attribute definitions.

Column	Description	Value	Value Meaning	Applicable F_Code for Each Attribute Value
ID	Row Identifier	Sequential beginning with 1		
F_CODE	FACC Feature Code			
		AP010	Cart Track	
		AQ070	Ferry Crossing	
		AQ130	Tunnel	
		BH070	Ford	
		GB055	Runway	
		ZD012	Geographic Information Point	
ACC	Accuracy Category			
		0	Unknown	AP010, AQ070, AQ130
		1	Accurate	AP010, AQ070, AQ130
		2	Approximate	AP010, AQ070, AQ130
		-MAXINT	Null	BH070, GB055, ZD012
EXS	Existence Category			
		0	Unknown	AQ130, GB055
		1	Definite	AQ130, GB055
		5	Under Construction	AQ130, GB055
		6	Abandoned/Disused	GB055
		-MAXINT	Null	AP010, AQ070, BH070, ZD012
FCO	Feature Configuration			
		0	Unknown	GB055
		8	Poorly Defined	GB055
		9	Well Defined	GB055
		-MAXINT	Null	AP010, AQ070, AQ130, BH070, ZD012

Column	Description	Value	Value Meaning	Applicable F_Code for Each Attribute Value
LEN	Length/Diameter (meters)			
		0	Unknown	AQ130, GB055
		>=100 m to <=42000 m		AQ130
		<=5000 m		GB055
		-MAXINT	Null	AP010, AQ070, BH070, ZD012
RST	Road/Runway Surface Type			
		0	Unknown	GB055
		1	Hard/Paved	GB055
		2	Loose/Unpaved	GB055
		-MAXINT	Null	AP010, AQ070, AQ130, BH070, ZD012
OHC	Overhead Clearance Category (decimeters)			
		0	Unknown	AQ130
		>0 to <=500 dm (50.0 m)		AQ130
		-MAXINT	Null	AP010, AQ070, BH070, GB055, ZD012
TUC	Transportation Use Category			
		0	Unknown	AQ130, AQ070
		3	Railroad	AQ130, AQ070
		4	Road	AQ130, AQ070
		-MAXINT	Null	AP010, BH070, GB055, ZD012
TXT	Text Attribute			
		Zero length VLT	Null	AP010, AQ070, AQ130, BH070, GB055
		Character String		ZD012

Column	Description	Value	Value Meaning	Applicable F_Code for Each Attribute Value
WD1	Minimum Travelled Way Width (decimeters)			
		0	Unknown	AQ130
		>0 to <=500 dm (50.0 m)		AQ130
		-MAXINT	Null	AP010, AQ070, BH070, GB055, ZD012
WID	Width (meters)			
		0	Unknown	GB055
		>0 to <=300 m		GB055
		-MAXINT	Null	AP010, AQ070, AQ130, BH070, ZD012

TABLE 78. Transportation railroad line feature table.

```
{Header Length}L;
TRRLINE.LFT,Transportation Railroad Line Feature Table;-;
ID=I,1,P,Row Identifier,-,-,-,:
F_CODE=T,5,N,FACC Feature Code,CHAR.VDT,F_CODE4.LTI,-,:
CTL=I,1,N,Cumulative Track Length (meters),INT.VDT,-,-,:
EXS=I,1,N,Existence Category,INT.VDT,-,-,:
FCO=I,1,N,Feature Configuration,INT.VDT,-,-,:
LEN=I,1,N,Length/Diameter (meters),INT.VDT,-,-:
RRA=I,1,N,Railroad Power Source,INT.VDT,-,-,:
RRC=I,1,N,Railroad/Road Categories,INT.VDT,-,-,:
RSA=I,1,N,Railroad Spur/Siding Attribute,INT.VDT,-,-,:;
```

TABLE 79. Railroad line join table.

```
{Header Length}L;
TRRLINE.LJT,Railroad Line Join Table;-;
ID=I,1,P,Row Identifier,-,-,-,:
TRRLINE.LFT_ID=I,1,N,Feature Key,-,TRRLINE4.JTI,-,:
EDG_ID=I,1,N,Primitive Key,-,EDG4.JTI,-,:;
```

NOTE: This table is used to combine linear railroad features, such as railroad sidings and tracks with their associated primitives as a one-to-many relationship. Railroad relationships will be based entirely on how the data was originally collected; no new processing or regrouping of these features will be performed.

A.6.3.5.5 Transportation railroad line attribute definitions.

Column	Description	Value	Value Meaning	Applicable F_Code for Each Attribute Value
ID	Row Identifier	Sequential beginning with 1		
F_CODE	FACC Feature Code			
		AN010	Railroad	
		AN050	Railroad Siding/ Railroad Spur	
		AN060	Railroad Yard/ Marshalling Yard	
CTL	Cumulative Track Length (meters)			
		0	Unknown	AN060
		>0 to <=99998 m		AN060
		-MAXINT	Null	AN010, AN050
EXS	Existence Category			
		0	Unknown	AN010, AN050, AN060
		1	Definite	AN010, AN050, AN060
		5	Under Construction	AN010, AN050, AN060
		8	Dismantled	AN010
FCO	Feature Configuration			
		0	Unknown	AN010 EXS<>8
		2	Multiple	AN010 EXS<>8
		3	Single	AN010 EXS<>8, AN050
		-MAXINT	Null	AN060, AN010, EXS=8
LEN	Length/Diameter (meters)			
		0	Unknown	AN050
		>=280 m to <=20000 m		AN050
		-MAXINT	Null	AN010, AN060
RRA	Railroad Power Source			
		0	Unknown	AN010 EXS<>8, AN050, AN060
		1	Electrified Track	AN010 EXS<>8, AN050, AN060

Column	Description	Value	Value Meaning	Applicable F_Code for Each Attribute Value
		4	Non-electrified	AN010 EXS<>8, AN050, AN060
		-MAXINT	Null	AN010, EXS=8
RRC	Railroad Categories			
		0	Unknown	AN010 EXS<>8, AN050, AN060
		1	Broad Gauge	AN010 EXS<>8, AN050, AN060
		4	Narrow/Narrow Gauge	AN010 EXS<>8, AN050, AN060
		5	Normal(Standard)Gauge	AN010 EXS<>8, AN050, AN060
		-MAXINT	Null	AN010, EXS=8
RSA	Railroad Spur/Siding Attribute			
		0	Unknown	AN050
		2	Siding	AN050
		3	Passing	AN050
		-MAXINT	Null	AN010, AN060

TABLE 80. Transportation bridge node table.

```
{Header Length}L;
TRBDGND.PFT,Transportation Bridge Node Feature Table;-;
ID=I,1,P,Row Identifier,-,-,-,:
CND_ID=I,1,N,Connected Node Primitive Foreign Key,-,-,-,:
F_CODE=T,5,N,FACC Feature Code,CHAR.VDT,F_CODE1.PTI,-,:
ACC=I,1,N,Accuracy Category,INT.VDT,-,-,:
BCC=I,1,N,Bypass Condition Category,INT.VDT,-,-,:
BRN=I,1,N,Bridge Reference Number,INT.VDT,-,-,:
EXS=I,1,N,Existence Category,INT.VDT,-,-,:
LC1=I,1,N,Load Class Type 1 (tons),INT.VDT,-,-,:
LC2=I,1,N,Load Class Type 2 (tons) INT.VDT,-,-,:
LC3=I,1,N,Load Class Type 3 (tons) INT.VDT,-,-,:
LC4=I,1,N,Load Class Type 4 (tons) INT.VDT,-,-,:
MCC=I,1,N,Material Composition Category,INT.VDT,-,-,:
NOS=I,1,N,Number of Spans,INT.VDT,-,-,:
OHC=I,1,N,Overhead Clearance Category (decimeters),INT.VDT,-,-,:
TUC=I,1,N,Transportation Use Category,INT.VDT,-,-,:
```

TABLE 80. Transportation bridge node table - Continued.

```
UBC=I,1,N,Underbridge Clearance Category (decimeters),INT.VDT,-,-,:
WD1=I,1,N, Minimum Travelled Way Width (decimeters),INT.VDT,-,-,:
YLN=I,1,N,Length of Greater Precision (decimeters),INT.VDT,-,-:;
```

NOTES:

1. All bridge spans are represented as node features. The Bridge Reference Number (BRN) attribute will be used to relate known bridge spans to the corresponding bridge, which may be either a line or node.
2. Coincident node features, bridges and bridge spans, may exist with an associated primitive.

A.6.3.5.6 Transportation bridge node attribute definitions.

Column	Description	Value	Value Meaning	Applicable F_Code for Each Attribute Value
ID	Row Identifier	Sequential beginning with 1		
F_CODE	FACC Feature Code			
		AQ040	Bridge/Overpass/Viaduct	
		AQ045	Bridge Span	
ACC	Accuracy Category			
		0	Unknown	AQ045
		1	Accurate	AQ045
		2	Approximate	AQ045
		-MAXINT	Null	AQ040
BCC	Bypass Condition Category			
		0	Unknown	AQ040 TUC<>3
		1	Easy	AQ040 TUC<>3
		2	Difficult	AQ040 TUC<>3
		3	Impossible	AQ040 TUC<>3
		-MAXINT	Null	AQ045, AQ040 TUC=3
BRN	Bridge Reference Number			
		0	Unknown	AQ040 TUC<>3, AQ045
		>0	Relates bridge to span	AQ040 TUC<>3, AQ045
		-MAXINT	Null	AQ040 TUC=3
EXS	Existence Category			
		0	Unknown	AQ040
		1	Definite	AQ040
		5	Under Construction	AQ040
		-MAXINT	Null	AQ045

Column	Description	Value	Value Meaning	Applicable F_Code for Each Attribute Value
LC1	Load Class Type 1 (tons)			
		0	Unknown	AQ040 TUC<>3
		>0 to <=200		AQ040 TUC<>3
		-MAXINT	Null	AQ045, AQ040 TUC=3
LC2	Load Class Type 2 (tons)			
		0	Unknown	AQ040 TUC<>3
		>0 to <=200		AQ040 TUC<>3
		-MAXINT	Null	AQ045, AQ040 TUC=3
LC3	Load Class Type 3 (tons)			
		0	Unknown	AQ040 TUC<>3
		>0 to <=200		AQ040 TUC<>3
		-MAXINT	Null	AQ045 AQ040 TUC=3
LC4	Load Class Type 4 (tons)			
		0	Unknown	AQ040 TUC<>3
		>0 to <=200		AQ040 TUC<>3
		-MAXINT	Null	AQ045, AQ040 TUC=3
MCC	Material Composition Category			
		0	Unknown	AQ045
		21	Concrete	AQ045
		62	Masonry (Brick/Stone)	AQ045
		77	Prestressed concrete	AQ045
		83	Reinforced concrete	AQ045
		107	Steel	AQ045
		108	Stone	AQ045
		117	Wood	AQ045
		-MAXINT	Null	AQ040
NOS	Number of Spans			
		0	Unknown	AQ040 TUC<>3
		>0 to <=98		AQ040 TUC<>3
		-MAXINT	Null	AQ045, AQ040 TUC=3
OHC	Overhead Clearance Category (decimeters)			
		0	Unknown	AQ040
		>0 to <=500 dm (50.0 m)		AQ040
		501 dm	Default for unlimited	AQ040
		-MAXINT	Null	AQ045

Column	Description	Value	Value Meaning	Applicable F_Code for Each Attribute Value
TUC	Transportation Use Category			
		0	Unknown	AQ040
		3	Railroad	AQ040
		4	Road	AQ040
		-MAXINT	Null	AQ045
WD1	Minimum Travelled Way Width (decimeters)			
		0	Unknown	AQ040 TUC<>3
		>0 to <=998 dm (99.8 m)		AQ040 TUC<>3
		-MAXINT	Null	AQ045, AQ040 TUC=3
UBC	Underbridge Clearance Category (decimeters)			
		0	Unknown	AQ040 TUC<>3
		>0 to <=998 dm		AQ040 TUC<>3
		-MAXINT	Null	AQ045, AQ040 TUC=3
YLN	Length of Greater Precision (decimeters)			
		0	Unknown	AQ040, AQ045
		<1000 dm (100.0 m)		AQ040,
		>0 to <=99998 dm		AQ045

TABLE 81. Transportation node feature table.

```
{Header Length}L;
TRNNODE.PFT,Transportation Node Feature Table;-;
ID=I,1,P,Row Identifier,-,-,-,:
CND_ID=I,1,N,Connected Node Primitive Foreign Key,-,-,-,:
F_CODE=T,5,N,FACC Feature Code,CHAR.VDT,F_CODE2.PTI,-,:
ACC=I,1,N,Accuracy Category,INT.VDT,-,-,:
EXS=I,1,N,Existence Category,INT.VDT,-,-,:
LEN=I,1,N,Length/Diameter (meters),INT.VDT,-,-,:
OHC=I,1,N,Overhead Clearance Category (decimeters),INT.VDT,-,-,:
TUC=I,1,N,Transportation Use Category,INT.VDT,-,-,:
TXT=T,*,N,Text Attribute,-,-,-,:
WD1=I,1,N,Minimum Travelled Way Width (decimeters),INT.VDT,-,-,:;
```

A.6.3.5.7 Transportation node attribute definitions.

Column	Description	Value	Value Meaning	Applicable F_Code for Each Attribute Value
ID	Row Identifier	Sequential beginning with 1		
F_CODE	FACC Feature Code			
		AQ058	Constriction/Expansion	
		AQ070	Ferry Crossing	
		AQ118	Sharp Curve	
		AQ130	Tunnel	
		BH070	Ford	
		ZD012	Geographic Information Point	
ACC	Accuracy Category			
		0	Unknown	AQ070, AQ130
		1	Accurate	AQ070, AQ130
		2	Approximate	AQ070, AQ130
		-MAXINT	Null	AQ058, AQ118 BH070, ZD012
EXS	Existence Category			
		0	Unknown	AQ130
		1	Definite	AQ130
		5	Under Construction	AQ130
		-MAXINT	Null	AQ058, AQ070, AQ118, BH070, ZD012
LEN	Length/Diameter (meters)			
		0	Unknown	AQ130
		<100 m		AQ130
		-MAXINT	Null	AQ058, AQ070, AQ118, BH070, ZD012
OHC	Overhead Clearance Category (decimeters)			
		0	Unknown	AQ130
		>0 to <=500 dm (50.0 m)		AQ130
		-MAXINT	Null	AQ058, AQ070, AQ118, BH070, ZD012

Column	Description	Value	Value Meaning	Applicable F_Code for Each Attribute Value
TUC	Transportation Use Category			
		0	Unknown	AQ130, AQ058, AQ070
		3	Railroad	AQ130, AQ058, AQ070
		4	Road	AQ130, AQ058, AQ070
		-MAXINT	Null	AQ118, BH070, ZD012
TXT	Text Attribute			
		Zero length VLT	Null	AQ058, AQ070, AQ118, AQ130, BH070
		Character String		ZD012
WD1	Minimum Travelled Way Width (decimeters)			
		0	Unknown	AQ130, AQ058
		>0 to <=500 dm (50.0 m)		AQ130
		>0 to <=40 dm (4.0 m)		AQ058
		-MAXINT	Null	AQ070, AQ118, BH070, ZD012

TABLE 82. Transportation feature class attribute table.

{Header Length}L;			
Transportation Feature Class Attribute Table;-;			
ID=I,1,P,Row Identifier,-,-,-,:			
FCLASS=T,8,U,Feature Class Name,-,-,-,:			
TYPE=T,1,N,Feature Type,CHAR.VDT,-,-,:			
DESCR=T,*,N,Description,-,-,-,:;			
1	TRNAREA	A	Railroad Yard and Runway
2	TRBLINE	L	Bridge and Bridge Spans
3	TRDLINE	L	Roads
4	TRNLINE	L	Tunnel, Ferry, and Runway
5	TRRLINE	L	Railroad Tracks, Siding, and Yards
6	TRBDGND	P	Bridge and Bridge Spans
7	TRNNODE	P	Tunnel, Ferry, and Sharp Curves

Column	Description	Value	Value Meaning	Applicable Feature Class for Each Attribute Value
ID	Row Identifier	Sequential beginning with 1		
FCLASS	Feature Class Name			
		TRNAREA		
		TRBLINE		
		TRDLINE		
		TRNLINE		
		TRRLINE		
		TRBDGND		
		TRNNODE		
TYPE	Feature Type			
		A	Area Feature	TRNAREA
		L	Line Feature	TRBLINE, TRDLINE, TRNLINE, TRRLINE
		P	Node Feature	TRBDGND, TRNNODE
DESCR	Description			
		Railroad Yard and Runway		TRNAREA
		Bridge and Bridge Spans		TRBLINE
		Roads		TRDLINE
		Tunnel, Ferry, and Runway		TRNLINE
		Railroad Tracks, Siding, and Yards		TRRLINE
		Bridge and Bridge Span		TRBDGND
		Tunnel, Ferry, and Sharp Curves		TRNNODE

TABLE 83. Transportation character value description table.

```
{Header Length}L;
CHAR.VDT,Transportation Character Value Description Table;-;
ID=I,1,P,Row Identifier,-,-,-,:
TABLE=T,12,N,Feature Class Table Name,-,-,-,:
ATTRIBUTE=T,6,N,Attribute Name,-,-,-,:
VALUE=T,5,N,Attribute Value,-,-,-,:
DESCRIPTION=T,50,N,Attribute Value Description,-,-,-,:;
```

1	TRNAREA.AFT	F_CODE	AN060	Railroad Yard/Marshalling Yard
2	TRNAREA.AFT	F_CODE	GB055	Runway
3	TRNAREA.AFT	F_CODE	ZD012	Geographic Information Point
4	TRDLINE.LFT	F_CODE	AP030	Road
5	TRRLINE.LFT	F_CODE	AN010	Railroad
6	TRRLINE.LFT	F_CODE	AN050	Railroad Siding/Railroad Spur
7	TRRLINE.LFT	F_CODE	AN060	Railroad Yard/Marshalling Yard
8	TRBLINE.LFT	F_CODE	AQ040	Bridge/Overpass/Viaduct
9	TRNLINE.LFT	F_CODE	AP010	Cart Track

TABLE 83. Transportation character value description table - Continued.

10	TRNLINE.LFT	F_CODE	AQ070	Ferry Crossing
11	TRNLINE.LFT	F_CODE	AQ130	Tunnel
12	TRNLINE.LFT	F_CODE	BH070	Ford
13	TRNLINE.LFT	F_CODE	GB055	Runway
14	TRNLINE.LFT	F_CODE	ZD012	Geographic Information Point
15	TRNNODE.PFT	F_CODE	AQ058	Constriction/Expansion
16	TRNNODE.PFT	F_CODE	AQ070	Ferry Crossing
17	TRNNODE.PFT	F_CODE	AQ118	Sharp Curve
18	TRNNODE.PFT	F_CODE	AQ130	Tunnel
19	TRNNODE.PFT	F_CODE	BH070	Ford
20	TRNNODE.PFT	F_CODE	ZD012	Geographic Information Point
21	TRBDGND.PFT	F_CODE	AQ040	Bridge/Overpass/Viaduct
22	TRBDGND.PFT	F_CODE	AQ045	Bridge Span
23	FCA	TYPE	A	Area Feature
24	FCA	TYPE	L	Line Feature
25	FCA	TYPE	P	Point/Node Feature

A.6.3.5.8 Transportation coverage glossary.

AREA FEATURES

AN060 Railroad Yard/Marshalling Yard A system of tracks within defined limits and associated features, which provides for loading/unloading and assembling trains.
CTL Cumulative Track Length (meters) Total cumulative length of track contained within confines of the feature, exclusive of the branch or main trunk lines running into and/or out of the feature.
EXS Existence Category The state or condition of the feature.
RRA Railroad Power Source Source of power for locomotion.
RRC Railroad Categories The type of railroad system used to support various transportation uses.

GB055 Runway A defined area, usually rectangular, used for the conventional landing and take-off of aircraft.
EXS Existence Category The state or condition of the feature.
FCO Feature Configuration Configuration of the feature objects(s).
LEN Length/Diameter (meters) A measurement of the longer of two linear axes. For a square feature, measure either axis. For a round feature, measure the diameter.

RST Road/Runway Surface Type Physical surface composition of feature.
WID Width (meters) A measurement of the shorter of two linear axes. For a square feature, measure either axis. For a round feature, width shall be equal to LEN.

ZD012 Geographic Information Point A location where geographic information or statistics may apply.(A feature of military significance and not captured by any other FACC code).
TXT Text Attribute Narrative or other description.

LINE FEATURES

AN010 Railroad A rail or set of parallel rails on which a train or trolley runs. (Numerous tracks, of the same gauge, on a single bed, shall be treated as one line feature).
EXS Existence Category The state or condition of the feature.
FCO Feature Configuration Configuration of the feature objects(s).
RRA Railroad Power Source Source of power for locomotion.
RRC Railroad Categories The type of railroad system used to support various transportation uses.

AN050 Railroad Siding/Railroad Spur A stretch of railroad track(s) connected to the main track system by switch(es) - used for temporary storage and loading/unloading.
EXS Existence Category The state or condition of the feature.
FCO Feature Configuration Configuration of the feature objects(s).
LEN Length/Diameter (meters) A measurement of the longer of two linear axes. For a square feature, measure either axis. For a round feature, measure the diameter.
RRA Railroad Power Source Source of power for locomotion.
RRC Railroad Categories The type of railroad system used to support various transportation uses.
RSA Railroad Spur/Siding Attribute Type of connecting track.

AN060 Railroad Yard/Marshalling Yard A system of tracks within defined limits and associated features which provides for loading/unloading and assembling trains.
CTL Cumulative Track Length (meters) Total cumulative length of track contained within confines of the feature, exclusive of the branch or main trunk lines running into and/or out of the feature.
EXS Existence Category The state or condition of the feature.
RRA Railroad Power Source Source of power for locomotion.
RRC Railroad Categories The type of railroad system used to support various transportation uses.

AP010 Cart Track An unimproved roadway.
ACC Accuracy Category Accuracy of the relative geographic position.

AP030 Road An open way maintained for vehicular use.
ACC Accuracy Category Accuracy of the relative geographic position.
EXS Existence Category The state or condition of the feature.
FCO Feature Configuration Configuration of the feature objects(s).
LOC Location Category Status of feature relative to surrounding area or water.
RST Road/Runway Surface Type The physical surface composition of feature.
SGC Gradient/Slope (percent) The percentage of slope.
WD1 Minimum Travelled Way Width (decimeters) Minimum width of the travelled way, excluding pavements and hard shoulders. In this product units will be in decimeters (0.1 m).
WTC Weather Type Category Weather conditions under which a feature is usable.

AQ040 Bridge/Overpass/Viaduct A man-made structure spanning and providing passage over a body of water, road, railroad, depression, or other obstacles.
BCC Bypass Condition Category The ease or ability to circumvent a destroyed section of a bridge, tunnel or pass within a 2 kilometer distance on each side of the feature. Bypass condition will not consider other bridges in bypass determination.
BRN Bridge Reference Number A unique number relating information to bridge and bridge spans.
EXS Existence Category The state or condition of the feature.
LC1 Load Class Type 1 (tons) Military load classification (weight bearing capacity) for one-way traffic of wheeled vehicles.
LC2 Load Class Type 2 (tons) Military load classification (weight bearing capacity) for two-way traffic of wheeled vehicles.
LC3 Load Class Type 3 (tons) Military load classification (weight bearing capacity) for one-way traffic of tracked vehicles.
LC4 Load Class Type 4 (tons) Military load classification (weight bearing capacity) for two-way traffic of tracked vehicles.
LEN Length/Diameter (meters) A measurement of the longer of two linear axes. For a square feature, measure either axis. For a round feature, measure the diameter. For a bridge, the length in the distance between its abutments.
NOS Number of Spans Number of spans.
OHC Overhead Clearance Category (decimeters) The least distance between the travelled way and any obstruction vertically above it. In this product units will be in decimeters (0.1 m)
TUC Transportation Use Category Identifies the primary user, function, or authority of the transportation system.
UBC Underbridge Clearance Category (decimeters) Clearance below bridge, measured from the lowest surface level to the base of the lower of either a cross beam or the lowest bridge deck. In this product units will be in decimeters (0.1 m).
WD1 Minimum Travelled Way Width (decimeters) Minimum width of the travelled way, excluding pavements and hard shoulders. In this product units will be in decimeters (0.1 m).

AQ070 Ferry Crossing A route in a body of water where a ferry crosses from one shoreline to another.
ACC Accuracy Category Accuracy of the relative geographic position.
TUC Transportation Use Category Identifies the primary user, function, or authority of the transportation system.

AQ130 Tunnel An underground or underwater passage, open at both ends, usually containing a road, canal, railroad or aqueduct.
ACC Accuracy Category Accuracy of the relative geographic position.
EXS Existence Category The state or condition of the feature.
LEN Length/Diameter (meters) A measurement of the longer of two linear axes. For a square feature, measure either axis. For a round feature, measure the diameter. For a bridge, the length in the distance between its abutments.
OHC Overhead Clearance Category (decimeters) The least distance between the travelled way and any obstruction vertically above it. In this product units will be in decimeters (0.1 m).
TUC Transportation Use Category Identifies the primary user, function, or authority of the transportation system.
WD1 Minimum Travelled Way Width (decimeters) Minimum width of the travelled way, excluding pavements and hard shoulders. In this product units will be in decimeters (0.1 m).

BH070 Ford A shallow place in a body of water used as a crossing.

GB055 Runway A defined area, usually rectangular, used for the conventional landing and take-off of aircraft.
EXS Existence Category The state or condition of the feature.
FCO Feature Configuration Configuration of the feature objects(s).
LEN Length/Diameter (meters) A measurement of the longer of two linear axes. For a square feature, measure either axis. For a round feature, measure the diameter.
RST Road/Runway Surface Type Physical surface composition of feature.
WID Width (meters) A measurement of the shorter of two linear axes. For a square feature, measure either axis. For a round feature, width shall be equal to LEN.

ZD012 Geographic Information Point A location where geographic information or statistics may apply.(A feature of military significance and not captured by any other FACC code).
TXT Text Attribute Narrative or other description.

NODE FEATURES

AQ040 Bridge/Overpass/Viaduct A man-made structure spanning and providing passage over a body of water, road, railroad, depression, or other obstacles.
BCC Bypass Condition Category The ease or ability to circumvent a destroyed section of a bridge, tunnel or pass within

a 2 kilometer distance on each side of the feature. Bypass condition will not consider other bridges in bypass determination.
BRN Bridge Reference Number A unique number relating information to bridge and bridge spans.
EXS Existence Category The state or condition of the feature.
LC1 Load Class Type 1 (tons) Military load classification (weight bearing capacity) for one-way traffic of wheeled vehicles.
LC2 Load Class Type 2 (tons) Military load classification (weight bearing capacity) for two-way traffic of wheeled vehicles.
LC3 Load Class Type 3 (tons) Military load classification (weight bearing capacity) for one-way traffic of tracked vehicles.
LC4 Load Class Type 4 (tons) Military load classification (weight bearing capacity) for two-way traffic of tracked vehicles.
NOS Number of Spans Number of spans.
OHC Overhead Clearance Category (decimeters) The least distance between the travelled way and any obstruction vertically above it. In this product units will be in decimeters (0.1 m).
TUC Transportation Use Category Identifies the primary user, function, or authority of the transportation system.
UBC Underbridge Clearance Category (decimeters) Clearance below bridge, measured from the lowest surface level to the base of the lower of either a cross beam or the lowest bridge deck. In this product units will be in decimeters (0.1 m).
WD1 Minimum Travelled Way Width (decimeters) Minimum width of the travelled way, excluding pavements and hard shoulders. In this product units will be in decimeters (0.1 m).
YLN Length of Greater Precision (decimeters) A measurement of the longer of two linear axes capable of being expressed in decimal meter units. In this product units will be in decimeters (0.1 m).

AQ045 Bridge Span A section of the bridge deck between successive supports such as pillars, piers, or abutments.
ACC Accuracy Category Accuracy of the relative geographic position.
BRN Bridge Reference Number A unique number relating information to bridge and bridge spans.
MCC Material Composition Category Composition material, excluding surface material.
YLN Length of Greater Precision (decimeters) A measurement of the longer of two linear axes capable of being expressed in decimal meter units. In this product units will be in decimeters (0.1 m).

AQ058 Constriction/Expansion A point where a passage way narrows or expands beyond its width.
TUC Transportation Use Category Identifies the primary user, function, or authority of the transportation system. (This attribute is used distinguish drop gate features.)
WD1 Minimum Travelled Way Width (decimeters) Minimum width of the travelled way, excluding pavements and hard shoulders. In this product units will be in decimeters (0.1 m).

AQ070 Ferry Crossing A route in a body of water where a ferry crosses from one shoreline to another.

ACC Accuracy Category Accuracy of the relative geographic position.
TUC Transportation Use Category Identifies the primary user, function, or authority of the transportation system.

AQ118 Sharp Curve A curve which may cause transportation restrictions.

AQ130 Tunnel An underground or underwater passage, open at both ends, usually containing a road, canal, railroad or aqueduct.
ACC Accuracy Category Accuracy of the relative geographic position.
EXS Existence Category The state or condition of the feature.
LEN Length/Diameter (meters) A measurement of the longer of two linear axes. For a square feature, measure either axis. For a round feature, measure the diameter. For a bridge, the length in the distance between its abutments.
OHC Overhead Clearance Category (decimeters) The least distance between the travelled way and any obstruction vertically above it. In this product units will be in decimeters (0.1 m).
TUC Transportation Use Category Identifies the primary user, function, or authority of the transportation system.
WD1 Minimum Travelled Way Width (decimeters) Minimum width of the travelled way, excluding pavements and hard shoulders. In this product units will be in decimeters (0.1 m).

BH070 Ford A shallow place in a body of water used as a crossing.

ZD012 Geographic Information Point A location where geographic information or statistics may apply.(A feature of military significance and not captured by any other FACC code).
TXT Text Attribute Narrative or other description.

TABLE 84. Transportation integer value description table.

{Header Length}L;
INT.VDT,Transportation Integer Value Description Table;-;
ID=I,1,P,Row Identifier,-,-,-,:
TABLE=T,12,N,Feature Class Table Name,-,-,-,:
ATTRIBUTE=T,3,N,Attribute Name,-,-,-,:
VALUE=I,1,N,Attribute Value,-,-,-,:
DESCRIPTION=T,50,N,Attribute Value Description,-,-,-,:;

1	TRNAREA.AFT	CTL	000	Unknown
2	TRNAREA.AFT	EXS	000	Unknown
3	TRNAREA.AFT	EXS	1	Definite
4	TRNAREA.AFT	EXS	5	Under Construction
5	TRNAREA.AFT	EXS	6	Abandoned/Disused
6	TRNAREA.AFT	FCO	000	Unknown
7	TRNAREA.AFT	FCO	8	Poorly Defined
8	TRNAREA.AFT	FCO	9	Well Defined
9	TRNAREA.AFT	LEN	000	Unknown
10	TRNAREA.AFT	RRA	000	Unknown
11	TRNAREA.AFT	RRA	1	Electrified Track
12	TRNAREA.AFT	RRA	4	Non-Electrified
13	TRNAREA.AFT	RRC	000	Unknown
14	TRNAREA.AFT	RRC	1	Broad Gauge
15	TRNAREA.AFT	RRC	4	Narrow/Narrow Gauge
16	TRNAREA.AFT	RRC	5	Normal (Standard) Gauge
17	TRNAREA.AFT	RST	000	Unknown
18	TRNAREA.AFT	RST	1	Hard/Paved
19	TRNAREA.AFT	RST	2	Loose/Unpaved
20	TRNAREA.AFT	WID	000	Unknown
21	TRRLINE.LFT	CTL	000	Unknown
22	TRRLINE.LFT	EXS	000	Unknown
23	TRRLINE.LFT	EXS	1	Definite
24	TRRLINE.LFT	EXS	5	Under Construction
25	TRRLINE.LFT	EXS	8	Dismantled
26	TRRLINE.LFT	FCO	000	Unknown
27	TRRLINE.LFT	FCO	2	Multiple
28	TRRLINE.LFT	FCO	3	Single
29	TRRLINE.LFT	LEN	000	Unknown
30	TRRLINE.LFT	RRA	000	Unknown
31	TRRLINE.LFT	RRA	1	Electrified Track
32	TRRLINE.LFT	RRA	4	Non-Electrified
33	TRRLINE.LFT	RRC	000	Unknown
34	TRRLINE.LFT	RRC	1	Broad Gauge

TABLE 84. Transportation integer value description table - Continued.

35	TRRLINE.LFT	RRC	4	Narrow/Narrow Gauge
36	TRRLINE.LFT	RRC	5	Normal (Standard) Gauge
37	TRRLINE.LFT	RSA	000	Unknown
38	TRRLINE.LFT	RSA	2	Siding
39	TRRLINE.LFT	RSA	3	Passing
40	TRDLINE.LFT	ACC	000	Unknown
41	TRDLINE.LFT	ACC	1	Accurate
42	TRDLINE.LFT	ACC	2	Approximate
43	TRDLINE.LFT	EXS	000	Unknown
44	TRDLINE.LFT	EXS	1	Definite
45	TRDLINE.LFT	EXS	5	Under Construction
46	TRDLINE.LFT	FCO	000	Unknown
47	TRDLINE.LFT	FCO	5	Divided same widths
48	TRDLINE.LFT	FCO	6	Divided different widths
49	TRDLINE.LFT	FCO	7	Non-divided
50	TRDLINE.LFT	LOC	000	Unknown
51	TRDLINE.LFT	LOC	8	On Ground Surface
52	TRDLINE.LFT	LOC	25	Suspended or Elevated Above Ground or Water Surface
53	TRDLINE.LFT	RST	000	Unknown
54	TRDLINE.LFT	RST	1	Hard/Paved
55	TRDLINE.LFT	RST	2	Loose/Unpaved
56	TRDLINE.LFT	SGC	3	<7% Default for H/C
57	TRDLINE.LFT	SGC	8	>=7% Default for H/C
58	TRDLINE.LFT	SGC	999	Unknown
59	TRDLINE.LFT	WD1	000	Unknown
60	TRDLINE.LFT	WTC	000	Unknown
61	TRDLINE.LFT	WTC	1	All Weather
62	TRDLINE.LFT	WTC	2	Fair/Dry Weather
63	TRBLINE.LFT	BCC	000	Unknown
64	TRBLINE.LFT	BCC	1	Easy
65	TRBLINE.LFT	BCC	2	Difficult
66	TRBLINE.LFT	BCC	3	Impossible
67	TRBLINE.LFT	BRN	000	Unknown
68	TRBLINE.LFT	EXS	000	Unknown
69	TRBLINE.LFT	EXS	1	Definite
70	TRBLINE.LFT	EXS	5	Under Construction
71	TRBLINE.LFT	LC1	000	Unknown
72	TRBLINE.LFT	LC2	000	Unknown
73	TRBLINE.LFT	LC3	000	Unknown

TABLE 84. Transportation integer value description table - Continued.

74	TRBLINE.LFT	LC4	000	Unknown
75	TRBLINE.LFT	LEN	000	Unknown
76	TRBLINE.LFT	NOS	000	Unknown
77	TRBLINE.LFT	OHC	000	Unknown
78	TRBLINE.LFT	OHC	501	Unlimited
79	TRBLINE.LFT	TUC	000	Unknown
80	TRBLINE.LFT	TUC	3	Railroad
81	TRBLINE.LFT	TUC	4	Road
82	TRBLINE.LFT	UBC	000	Unknown
83	TRBLINE.LFT	WD1	000	Unknown
84	TRNLINE.LFT	ACC	000	Unknown
85	TRNLINE.LFT	ACC	1	Accurate
86	TRNLINE.LFT	ACC	2	Approximate
87	TRNLINE.LFT	EXS	000	Unknown
88	TRNLINE.LFT	EXS	1	Definite
89	TRNLINE.LFT	EXS	5	Under Construction
90	TRNLINE.LFT	EXS	6	Abandoned/Disused
91	TRNLINE.LFT	FCO	000	Unknown
92	TRNLINE.LFT	FCO	8	Poorly Defined
93	TRNLINE.LFT	FCO	9	Well Defined
94	TRNLINE.LFT	LEN	000	Unknown
95	TRNLINE.LFT	OHC	000	Unknown
96	TRNLINE.LFT	RST	000	Unknown
97	TRNLINE.LFT	RST	1	Hard/Paved
98	TRNLINE.LFT	RST	2	Loose/Unpaved
99	TRNLINE.LFT	TUC	000	Unknown
100	TRNLINE.LFT	TUC	3	Railroad
101	TRNLINE.LFT	TUC	4	Road
102	TRNLINE.LFT	WD1	000	Unknown
103	TRNLINE.LFT	WID	000	Unknown
104	TRNNODE.PFT	ACC	000	Unknown
105	TRNNODE.PFT	ACC	1	Accurate
106	TRNNODE.PFT	ACC	2	Approximate
107	TRNNODE.PFT	EXS	000	Unknown
108	TRNNODE.PFT	EXS	1	Definite
109	TRNNODE.PFT	EXS	5	Under Construction
110	TRNNODE.PFT	LEN	000	Unknown
111	TRNNODE.PFT	OHC	000	Unknown
112	TRNNODE.PFT	TUC	000	Unknown
113	TRNNODE.PFT	TUC	3	Railroad

TABLE 84. Transportation integer value description table - Continued.

114	TRNNODE.PFT	TUC	4	Road
115	TRNNODE.PFT	WD1	000	Unknown
116	TRBDGND.PFT	ACC	000	Unknown
117	TRBDGND.PFT	ACC	1	Accurate
118	TRBDGND.PFT	ACC	2	Approximate
119	TRBDGND.PFT	BCC	000	Unknown
120	TRBDGND.PFT	BCC	1	Easy
121	TRBDGND.PFT	BCC	2	Difficult
122	TRBDGND.PFT	BCC	3	Impossible
123	TRBDGND.PFT	BRN	000	Unknown
124	TRBDGND.PFT	EXS	000	Unknown
125	TRBDGND.PFT	EXS	1	Definite
126	TRBDGND.PFT	EXS	5	Under Construction
127	TRBDGND.PFT	LC1	000	Unknown
128	TRBDGND.PFT	LC2	000	Unknown
129	TRBDGND.PFT	LC3	000	Unknown
130	TRBDGND.PFT	LC4	000	Unknown
131	TRBDGND.PFT	MCC	000	Unknown
132	TRBDGND.PFT	MCC	21	Concrete
133	TRBDGND.PFT	MCC	62	Masonry (Brick/Stone)
134	TRBDGND.PFT	MCC	77	Prestressed Concrete
135	TRBDGND.PFT	MCC	83	Reinforced Concrete
136	TRBDGND.PFT	MCC	107	Steel
137	TRBDGND.PFT	MCC	108	Stone
138	TRBDGND.PFT	MCC	117	Wood
139	TRBDGND.PFT	NOS	000	Unknown
140	TRBDGND.PFT	OHC	000	Unknown
141	TRBDGND.PFT	OHC	501	Unlimited
142	TRBDGND.PFT	TUC	000	Unknown
143	TRBDGND.PFT	TUC	3	Railroad
144	TRBDGND.PFT	TUC	4	Road
145	TRBDGND.PFT	UBC	000	Unknown
146	TRBDGND.PFT	WD1	000	Unknown
147	TRBDGND.PFT	YLN	000	Unknown

A.6.3.6 Vegetation coverage. The Feature Class Schema table creates the relationship between the feature and primitive tables as shown in TABLE 85. This coverage contains various types of vegetation in a land use and land cover classification scheme as related to military applications. Selected water bodies and urban areas are delineated as a separate feature class in this coverage. Feature and Feature Class Attribute tables are presented in TABLES 86 thru 89. The value description tables for the Vegetation coverage are provided in TABLES 90 and 91. Generally

the minimum size for portrayal of a vegetation polygon is 50,000 square meters (50 m by 1000 m).

TABLE 85. Vegetation feature class schema table (FCS).

```
{Header Length}L;
Vegetation Feature Class Schema Table;-;
ID=I,1,P,Row Identifier,-,-,-,:
FEATURE_CLASS=T,8,N,Name of Feature Class,-,-,-,:
TABLE1=T,12,N,First Table in a Relationship,-,-,-,:
TABLE1_KEY=T,16,N,Column Name in First Table,-,-,-,:
TABLE2=T,12,N,Second Table in a Relationship,-,-,-,:
TABLE2_KEY=T,9,N,Column Name in a Second Table,-,-,-,:;
```

1	VEGAREA	VEGAREA.AFT	FAC_ID	FAC	ID
2	VEGAREA	FAC	ID	VEGAREA.AFT	FAC_ID
3	VGWAREA	VGWAREA.AFT	FAC_ID	FAC	ID
4	VGWAREA	FAC	ID	VGWAREA.AFT	FAC_ID
5	VGFAREA	VGFAREA.AFT	FAC_ID	FAC	ID
6	VGFAREA	FAC	ID	VGFAREA.AFT	FAC_ID

TABLE 86. Vegetation area feature table.

```
{Header Length}L;
VEGAREA.AFT,Vegetation Area Feature Table;-;
ID=I,1,P,Row Identifier,-,-,-,:
FAC_ID=I,1,N,Face Primitive Foreign Key,-,-,-,:
F_CODE=T,5,N,FACC Feature Code,CHAR.VDT,F_CODE1.ATI,-,:
FTC=I,1,N,Farming Type Category,INT.VDT,-,-,:
VEG=I,1,N,Vegetation Characteristics,INT.VDT,-,-,:;
```

A.6.3.6.1 Vegetation area attribute definitions.

Column	Description	Value	Value Meaning	Applicable F_Code for Each Attribute Value
ID	Row Identifier	Sequential beginning with 1		
F_CODE	FACC Feature Code			
		BH090	Land Subject to Inundation	
		BH135	Rice Field	
		DA020	Barren Ground	
		EA010	Cropland	
		EA050	Vineyard (hops also included)	
		EB010	Grassland	
		EB020	Scrub/Brush	
		EC010	Bamboo/Cane	

Column	Description	Value	Value Meaning	Applicable F_Code for Each Attribute Value
FTC	Farming Type Category			
		0	Unknown	EA010, BH135
		1	Shifting Cultivation	EA010
		3	Terraced	EA010, BH135
		-MAXINT	Null	BH090, DA020, EA050, EB010, EB020, EC010
VEG	Vegetation Characteristics			
		0	Unknown	EA010
		1	Dry crops	EA010
		8	Pasture, meadow, steppe	EB010
		9	Grassland with scattered trees	EB010
		53	Brushland open to medium spacing	EB020
		54	Brushland medium to dense spacing	EB020
		-MAXINT	Null	BH090, BH135, DA020, EA050, EC010

TABLE 87. Vegetation forested area feature table.

```
{Header Length}L;
VGFAREA.AFT,Vegetation Forested Area Feature Table;-;
ID=I,1,P,Row Identifier,-,-,-,:
FAC_ID=I,1,N,Face Primitive Foreign Key,-,-,-,:
F_CODE=T,5,N,FACC Feature Code,CHAR.VDT,F_CODE2.ATI,-,:
BUD=I,1,N,Brush/Undergrowth Density Code,INT.VDT,-,-,:
DMT=I,1,N,Density Measure(% of Tree/Canopy Cover),INT.VDT,-,-,:
PHT=I,1,N,Predominant Height (meters),INT.VDT,-,-,:
SDS=I,1,N,Stem Diameter Size (centimeters),INT.VDT,-,-,:
TSC=I,1,N,Tree Spacing Category (decimeters),INT.VDT,-,-,:
VEG=I,1,N,Vegetation Characteristics,INT.VDT,-,-,:;
```

A.6.3.6.2 Vegetation forested area attribute definitions.

Column	Description	Value	Value Meaning	Applicable F_Code for Each Attribute Value
ID	Row Identifier	Sequential beginning with 1		
F_CODE	FACC Feature Code			
		BH095	Marsh/Swamp	
		EA040	Orchard/Plantation	
		EC030	Trees	
BUD	Brush/Undergrowth Density Code			
		0	Unknown	BH095, EA040, EC030
		2	Sparse(>5% to <=15%)	BH095, EA040, EC030
		4	Dense(>50%)	BH095, EA040, EC030
		-MAXINT	Null	BH095 VEG=56, EC030 VEG=52
DMT	Density Measure (% of Tree/Canopy Cover)			
		999	Unknown	BH095, EA040, EC030
		12	Default for >0 to <=25%	BH095, EA040, EC030
		38	Default for >25% to <=50%	BH095, EA040, EC030
		62	Default for >50% to <=75%	BH095, EA040, EC030
		88	Default for >75% to <=100%	BH095, EA040, EC030
		0 to 100	Allowable values	BH095, EA040, EC030
		-MAXINT	Null	BH095 VEG=56, EC030 VEG=52

Column	Description	Value	Value Meaning	Applicable F_Code for Each Attribute Value
PHT	Predominant Height (meters)			
		0	Unknown	EA040, EC030
		1	Default for 0 to <=2 m range	EA040, EC030
		4	Default for >2 m to <=5 m range	EA040, EC030
		8	Default for >5 m to <=10 m range	EA040, EC030
		12	Default for >10 m to <=15 m range	EA040, EC030
		18	Default for >15 m to <=20 m range	EA040, EC030
		22	Default for >20 m to <=25 m range	EA040, EC030
		28	Default for >25 m to <=30 m range	EA040, EC030
		32	Default for >30 m to <=35 m range	EA040, EC030
		38	Default for >35 m range	EA040, EC030
		0 to 150	Allowable values	EA040, EC030
		-MAXINT	Null	BH095, EC030 VEG=52
SDS	Stem Diameter Size (centimeters)			
		0	Unknown	EA040, EC030
		>0 to <=900 cm		EA040, EC030
		-MAXINT	Null	BH095, EC030 VEG=52
TSC	Tree Spacing Category (decimeters)			
		0	Unknown	EA040, EC030
		>0 to <=500 dm		EA040, EC030
		-MAXINT	Null	BH095, EC030 VEG=52

Column	Description	Value	Value Meaning	Applicable F_Code for Each Attribute Value
VEG	Vegetation Characteristics			
		0	Unknown	BH095, EA040, EC030
		17	Palm	EA040
		19	Mangrove	BH095
		24	Deciduous	BH095, EA040, EC030
		25	Evergreen	BH095, EA040, EC030
		50	Mixed Trees	BH095, EA040, EC030
		52	Forest clearing	EC030
		55	With Trees	BH095
		56	Without Trees	BH095

TABLE 88. Vegetation water area feature table.

```
{Header Length}L;
VGWAREA.AFT,Vegetation Water Area Feature Table;-;
ID=I,1,P,Row Identifier,-,-,-,:
FAC_ID=I,1,N,Face Primitive Foreign Key,-,-,-,:
F_CODE=T,5,N,FACC Feature Code,CHAR.VDT,F_CODE3.ATI,-,:
TXT=T,*,N,Text Attribute,-,-,-,:;
```

A.6.3.6.3 Vegetation water area attribute definitions.

Column	Description	Value	Value Meaning	Applicable F_Code for Each Attribute Value
ID	Row Identifier	Sequential beginning with 1		
F_CODE	FACC Feature Code			
		AL020	Built-Up Area	
		SA010	Common Open Water	
		ZD012	Geographic Information Point	
TXT	Text Attribute			
		Zero length VLT	Null	SA010, AL020
		Character text string		ZD012

TABLE 89. Vegetation feature class attribute table.

{Header Length}L;			
Vegetation Feature Class Attribute Table;-;			
ID=I,1,P,Row Identifier,-,-,-,:			
FCLASS=T,8,U,Feature Class Name,-,-,-,:			
TYPE=T,1,N,Feature Type,CHAR.VDT,-,-,:			
DESCR=T,*,N,Description,-,-,-,:;			
1	VEGAREA	A	Non-forested Areas
2	VGFAREA	A	Forested Areas
3	VGWAREA	A	Open Water and Built-up Areas

Column	Description	Value	Value Meaning	Applicable Feature Class for Each Attribute Value
ID	Row Identifier	Sequential beginning with 1		
FCLASS	Feature Class Name	VEGAREA VGFAREA VGWAREA		
TYPE	Feature Type	A	Area Feature	VEGAREA, VGFAREA, VGWAREA
DESCR	Description	Non-forested Areas Forested Areas Open Water and Built-Up Areas		VEGAREA VGFAREA VGWAREA

TABLE 90. Vegetation character value description table.

{Header Length}L;				
CHAR.VDT,Vegetation Character Value Description Table;-;				
ID=I,1,N,Row Identifier,-,-,-,:				
TABLE=T,12,N,Feature Class Table Name,-,-,-,:				
ATTRIBUTE=T,6,N,Attribute Name,-,-,-,:				
VALUE=T,5,N,Attribute Value,-,-,-,:				
DESCRIPTION=T,50,N,Attribute Value Description,-,-,-,:;				
1	VEGAREA.AFT	F_CODE	BH090	Land Subject to Inundation
2	VEGAREA.AFT	F_CODE	BH135	Rice Field
3	VEGAREA.AFT	F_CODE	DA020	Barren Ground
4	VEGAREA.AFT	F_CODE	EA010	Cropland
5	VEGAREA.AFT	F_CODE	EA050	Vineyards
6	VEGAREA.AFT	F_CODE	EB010	Grassland
7	VEGAREA.AFT	F_CODE	EB020	Scrub/Brush
8	VEGAREA.AFT	F_CODE	EC010	Bamboo/Cane
9	VGFAREA.AFT	F_CODE	BH095	Marsh/Swamp
10	VGFAREA.AFT	F_CODE	EA040	Orchard/Plantation
11	VGFAREA.AFT	F_CODE	EC030	Trees
12	VGWAREA.AFT	F_CODE	AL020	Built-Up Area
13	VGWAREA.AFT	F_CODE	SA010	Common Open Water
14	VGWAREA.AFT	F_CODE	ZD012	Geographic Information Point
15	FCA	TYPE	A	Area Feature

A.6.3.6.4 Vegetation coverage glossary.

AREA FEATURES

AL020 Built-Up Area An area containing a concentration of buildings and structures.

BH090 Land Subject to Inundation An area periodically covered by flood water, excluding tidal waters.

BH095 Marsh/Swamp A saturated area, at times covered by water, supporting vegetation which may include trees.
BUD Brush/Undergrowth Density Code Density of undergrowth or brush.
DMT Density Measure (% of Tree/Canopy Cover) Canopy cover measured by percent within area of feature during the summer season (leaves-on condition).
VEG Vegetation Characteristics Type of plant or plantings.

BH135 Rice Field An area periodically covered with water used for growing rice.
FTC Farming Type Category Type of field pattern.

DA020 Barren Ground Land surface void of vegetation or other specific surface materials.

EA010 Cropland An area that has been tilled for the planting of crops.
FTC Farming Type Category Type of field pattern.
VEG Vegetation Characteristics Type of plant or plantings.

EA040 Orchard/Plantation An area covered by systematic planting of trees which yield fruits, nuts, or other products.
BUD Brush/Undergrowth Density Code Density of undergrowth or brush.
DMT Density Measure (% of Tree/Canopy Cover) Canopy cover measured by percent within area of feature during the summer season (leaves-on condition).
PHT Predominant Height (meters) Height of 51% or more of the feature. If not obtainable, then the average height of the feature will be used.
SDS Stem Diameter Size (centimeters) The average stem diameter in a stand, measured at a height of 1.4 meters above the ground. Unit of measurement is in centimeters (0.01 m).
TSC Tree Spacing Category (decimeters) The average distance from the center of one tree to center of the nearest tree in a stand. Unit of measurement is in decimeters (0.1 m).
VEG Vegetation Characteristics Type of plant or plantings.

EA050 Vineyards An area covered by the systematic planting of grape vines. In this product hops are represented in this category.

EB010 Grassland An area composed of uncultured plants which have little or no woody tissue.
VEG Vegetation Characteristics Type of plant or plantings.

EB020 Scrub/Brush Low-growing woody plants.
VEG Vegetation Characteristics Type of plant or plantings.

EC010 Bamboo/Cane Woody, treelike grass.

EC030 Trees Woody-perennial plants, having a self-supporting main stem or trunk.
BUD Brush/Undergrowth Density Code Density of undergrowth or brush.
DMT Density Measure (% of Tree/Canopy Cover) Canopy cover measured by percent within area of feature during the summer season (leaves-on condition). In this product default values represent ranges.
PHT Predominant Height (meters) Height of 51% or more of the feature. If not obtainable, then the average height of the feature will be used. For this product default values will represent ranges.

SDS Stem Diameter Size (centimeters) The average stem diameter in a stand, measured at a height of 1.4 meters above the ground. Unit of measurement is centimeters (0.01 m).

TSC Tree Spacing Category (decimeters) The average distance from the center of one tree to center of the nearest tree in a stand. Unit of measurement is decimeters (0.1 m).
VEG Vegetation Characteristics Type of plant or plantings.

SA010 Common Open Water An area containing any surface water that is flowing or free standing such as lakes, rivers, oceans, reservoirs, etc.

ZD012 Geographic Information Point A location where geographic information or statistics may apply.(A feature of military significance and not captured by any other FACC code).
TXT Text Attribute Narrative or other description.

TABLE 91. Vegetation integer value description table.

{Header Length}L;				
INT.VDT,Vegetation Integer Value Description Table;-;				
ID=I,1,P,Row Identifier,-,-,-,:				
TABLE=T,12,N,Feature Class Table Name,-,-,-,:				
ATTRIBUTE=T,3,N,Attribute Name,-,-,-,:				
VALUE=I,1,N,Attribute Value,-,-,-,:				
DESCRIPTION=T,50,N,Attribute Value Description,-,-,-,:;				
1	VEGAREA.AFT	FTC	000	Unknown
2	VEGAREA.AFT	FTC	1	Shifting Cultivation
3	VEGAREA.AFT	FTC	3	Terraced
4	VEGAREA.AFT	VEG	000	Unknown
5	VEGAREA.AFT	VEG	1	Dry crops
6	VEGAREA.AFT	VEG	8	Pasture, meadow, steppe
7	VEGAREA.AFT	VEG	9	Grassland with scattered trees
8	VEGAREA.AFT	VEG	53	Brushland open to medium spacing
9	VEGAREA.AFT	VEG	54	Brushland medium to dense spacing
10	VGFAREA.AFT	BUD	000	Unknown
11	VGFAREA.AFT	BUD	2	Sparse (>5% to <=15%)
12	VGFAREA.AFT	BUD	4	Dense (>50%)
13	VGFAREA.AFT	DMT	12	>0 to <=25%
14	VGFAREA.AFT	DMT	38	>25% to <=50%
15	VGFAREA.AFT	DMT	62	>50% to <=75%
16	VGFAREA.AFT	DMT	88	<75% to <=100%

TABLE 91. Vegetation integer value description table - Continued.

17	VGFAREA.AFT	DMT	999	Unknown
18	VGFAREA.AFT	PHT	000	Unknown
19	VGFAREA.AFT	PHT	1	0 to <=2 m
20	VGFAREA.AFT	PHT	4	>2 m to <=5 m
21	VGFAREA.AFT	PHT	8	>5 m to <=10 m
22	VGFAREA.AFT	PHT	12	>10 m to <=15 m
23	VGFAREA.AFT	PHT	18	>15 m to <=20 m
24	VGFAREA.AFT	PHT	22	>20 m to <=25 m
25	VGFAREA.AFT	PHT	28	>25 m to <=30 m
26	VGFAREA.AFT	PHT	32	>30 m to <=35 m
27	VGFAREA.AFT	PHT	38	>35 m
28	VGFAREA.AFT	SDS	000	Unknown
29	VGFAREA.AFT	TSC	000	Unknown
30	VGFAREA.AFT	VEG	000	Unknown
31	VGFAREA.AFT	VEG	17	Palm
32	VGFAREA.AFT	VEG	19	Mangrove
33	VGFAREA.AFT	VEG	24	Deciduous
34	VGFAREA.AFT	VEG	25	Evergreen
35	VGFAREA.AFT	VEG	50	Mixed Trees
36	VGFAREA.AFT	VEG	52	Forest Clearing
37	VGFAREA.AFT	VEG	55	With Trees
38	VGFAREA.AFT	VEG	56	Without Trees

A.6.4 TADS tree structure. The Terrain Analysis Data Set tree structure for the CCXXXXXX library is presented in TABLE 92.

TABLE 92. TADS tree structure.

Database	Library	Coverage	Feature Class	Primitive	Index
/TADS	/CCXXXXXX	/OBS	OBSAREA.AFT	FAC	EDX
DHT	LHT	FCS	OBSAREA.AFX	RNG	CSI
LAT	GRT	CHAR.VDT	OBSLINE.LFT	EDG	FSI
	CAT	INT.VDT	OBSLINE.LFX	CND	ESI
	DQT	FCA	OBSLINE.LJT	FBR	#.ATI
	LINEAGE.DOC	EDG.FIT	OBSNODE.PFT	EBR	#.LTI
		FAC.FIT	OBSNODE.PFX		#.PTI
		CND.FIT			#.JTI
					#.FTI
					FCX

TABLE 92. TADS tree structure - Continued.

Database	Library	Coverage	Feature Class	Primitive	Index
		/SLP	SLPAREA.AFT	FAC	FSI
		FCS	SLWAREA.AFT	RNG	ESI
		CHAR.VDT	SLWAREA.AFX	EDG	EDX
		INT.VDT		CND	#.ATI
		FCA		FBR	#.FTI
		FAC.FIT		EBR	FCX
		/SMC	SMCAREA.AFT	FAC	FSI
		FCS	SMWAREA.AFT	RNG	ESI
		CHAR.VDT	SMWAREA.AFX	EDG	EDX
		INT.VDT		CND	#.ATI
		FCA		FBR	#.FTI
		FAC.FIT		EBR	FCX
		/SDR	SDCAREA.AFT	FAC	EDX
		FCS	SDRAREA.AFT	RNG	FSI
		CHAR.VDT	SDRAREA.AFX	EDG	ESI
		INT.VDT	SDCLINE.LFT	END	NSI
		FCA	SDCLINE.LJT	CND	CSI
		FAC.FIT	SDRLINE.LFT	FBR	#.ATI
		EDG.FIT	SDRLINE.LFX	EBR	#.LTI
		CND.FIT	SDRLINE.LJT		#.PTI
		END.FIT	SDRNODE.PFT		#.JTI
			SDRNODE.PFX		#.FTI
			SDRPOINT.PFT		FCX
		/TRN	TRNAREA.AFT	FAC	EDX
		FCS	TRNAREA.AFX	RNG	FSI
		CHAR.VDT	TRNAREA.AJT	EDG	ESI
		INT.VDT	TRBLINE.LFT	CND	#.ATI
		FCA	TRBLINE.LJT	FBR	#.LTI
		FAC.FIT	TRDLINE.LFT	EBR	#.PTI
		EDG.FIT	TRDLINE.LJT		#.JTI
		CND.FIT	TRNLINE.LFT		#.FTI
			TRNLINE.LFX		FCX
			TRNLINE.LJT		
			TRRLINE.LFT		
			TRRLINE.LJT		
			TRBDGND.PFT		
			TRNNODE.PFT		
			TRNNODE.PFX		
		/VEG	VEGAREA.AFT	FAC	FSI
		FCS	VGFAREA.AFT	RNG	ESI
		CHAR.VDT	VGWAREA.AFT	EDG	EDX
		INT.VDT	VGWAREA.AFX	CND	#.ATI
		FCA		FBR	#.FTI
		FAC.FIT		EBR	FCX

NOTE:

1. The pound sign (#) is replaced with the prefix of the thematic index name, which is based on the column name to which the index refers.

A.7 FACC FEATURE AND ATTRIBUTE CODES FOR TADS LIBRARIES

A.7.1 Description of coverage. TABLE 93 contains all valid FACC codes and primitive types for each coverage in TADS data libraries.

TABLE 93. TADS FACC codes by coverage and feature type.

Cov	FACC Code	Feature Name	Face	Edge	Entity Node	Connected Node
OBS	AL060	Dragon Teeth	FAC	EDG		
OBS	AL195	Ramp				CND
OBS	AL260	Wall		EDG		
OBS	AQ113	Pipeline/Pipe		EDG		
OBS	BH100	Moat		EDG		
OBS	DB010	Bluff/Cliff/Escarpment		EDG		
OBS	DB070	Cut		EDG		
OBS	DB080	Depression	FAC			
OBS	DB090	Embankment/Fill		EDG		
OBS	DB190	Volcanic Dike		EDG		
OBS	EA020	Hedgerow		EDG		
OBS	ZD012	Geographic Information Point	FAC	EDG		CND
SDR	AQ111	Prepared Raft or Float Bridge Site		EDG		CND
SDR	BA030	Island	FAC			
SDR	BH020	Canal	FAC	EDG		
SDR	BH070	Ford		EDG		CND
SDR	BH140	River/Stream	FAC	EDG		
SDR	BI020	Dam		EDG	END	CND
SDR	BI030	Lock		EDG		CND
SDR	DB200	Gully/Gorge	FAC	EDG		
SDR	SA010	Common Open Water	FAC			
SDR	SA060	Covered Drainage		EDG		
SDR	ZD012	Geographic Information Point	FAC	EDG		CND
SLP	SA010	Common Open Water	FAC			
SLP	SA050	Slope Polygon	FAC			

TABLE 93. TADS FACC codes by coverage and feature type - Continued.

Cov	FACC Code	Feature Name	Face	Edge	Entity Node	Connected Node
SLP	ZD012	Geographic Information Point	FAC			
SMC	DA010	Ground Surface Element	FAC			
SMC	SA010	Common Open Water	FAC			
SMC	SA020	Disturbed Soil	FAC			
SMC	SA030	Exposed Bedrock	FAC			
SMC	SA040	Permanent Snowfield	FAC			
SMC	ZD012	Geographic Information Point	FAC			
TRN	AN010	Railroad		EDG		
TRN	AN050	Railroad Siding/ Railroad Spur		EDG		
TRN	AN060	Railroad Yard/ Marshalling Yard	FAC	EDG		
TRN	AP010	Cart Track		EDG		
TRN	AP030	Road		EDG		
TRN	AQ040	Bridge/Overpass/Viaduct		EDG		CND
TRN	AQ045	Bridge Span				CND
TRN	AQ058	Constriction/Expansion				CND
TRN	AQ070	Ferry Crossing		EDG		CND
TRN	AQ118	Sharp Curve				CND
TRN	AQ130	Tunnel		EDG		CND
TRN	BH070	Ford		EDG		CND
TRN	GB055	Runway	FAC	EDG		
TRN	ZD012	Geographic Information Point	FAC	EDG		CND
VEG	AL020	Built-Up Area	FAC			
VEG	BH090	Land Subject to Inundation	FAC			
VEG	BH095	Marsh/Swamp	FAC			
VEG	BH135	Rice Field	FAC			
VEG	DA020	Barren Ground	FAC			
VEG	EA010	Cropland	FAC			
VEG	EA040	Orchard/Plantation	FAC			
VEG	EA050	Vineyard	FAC			
VEG	EB010	Grassland	FAC			
VEG	EB020	Scrub/Brush	FAC			
VEG	EC010	Bamboo/Cane	FAC			
VEG	EC030	Trees	FAC			
VEG	SA010	Common Open Water	FAC			
VEG	ZD012	Geographic Information Point	FAC			

A.7.2 Description of attributes. In cases where a feature has associated attributes whose values are null or unknown, a standard convention will be used to code the values. Null values will be assigned per VPF rules (refer to MIL-STD-2407, section 5.5), which will vary according to the field type. TABLE 94 contains valid FACC attributes and their range of values in TADS libraries. Additional attributes used to describe coverage feature tables may be found in Appendix A, Section 6.

TABLE 94. FACC attributes, VPF format, range, unknown and null values for TADS.

FACC Attribute	Attribute Name (unit of measure)	VPF Field Type	Field Size in Bytes	Range		Unknown	Null
				Min	Max		
ACC	Accuracy Category	I	4	1	2	0	-MAXINT
BCC	Bypass Condition Category	I	4	1	3	0	-MAXINT
BGL	Bank Gradient Left	I	4	1	998	0	-MAXINT
BGR	Bank Gradient Right	I	4	1	998	0	-MAXINT
BHL	Bank Height Left (decimeters)	I	4	1	9999	0	-MAXINT
BHR	Bank Height Right (decimeters)	I	4	1	9999	0	-MAXINT
BRN	Bridge Reference Number	I	4	1	999	0	-MAXINT
BUD	Brush/Undergrowth Density Code	I	4	1	4	0	-MAXINT
BVL	Bank Vegetation Left	I	4	1	4	0	-MAXINT
BVR	Bank Vegetation Right	I	4	1	4	0	-MAXINT
CTL	Cumulative Track Length (meters)	I	4	1	99998	0	-MAXINT
DMT	Density Measure	I	4	0	100	999	-MAXINT
EXS	Existence Category	I	4	1	8	0	-MAXINT
FCO	Feature Configuration	I	4	1	9	0	-MAXINT
FTC	Farming Type Category	I	4	1	3	0	-MAXINT
GSC	Ground Slope Category	I	4	1	7	0	-MAXINT
HGT	Height Above Surface Level (meters)	I	4	1	998	0	-MAXINT
HYC	Hydrological Category	I	4	1	14	0	-MAXINT

TABLE 94. FACC attributes, VPF format, range, unknown and null values for TADS - Continued

FACC Attribute	Attribute Name (unit of measure)	VPF Field Type	Field Size in Bytes	Range Min	Range Max	Unknown	Null
LC1	Load Class Type 1 (tons)	I	4	1	200	0	-MAXINT
LC2	Load Class Type 2 (tons)	I	4	1	200	0	-MAXINT
LC3	Load Class Type 3 (tons)	I	4	1	200	0	-MAXINT
LC4	Load Class Type 4 (tons)	I	4	1	200	0	-MAXINT
LEN	Length/Diameter (meters)	I	4	1	99998	0	-MAXINT
LOC	Location Category	I	4	1	25	0	-MAXINT
MCC	Material Composition Category	I	4	1	999	0	-MAXINT
NOS	Number of Spans	I	4	1	98	0	-MAXINT
OHC	Overhead Clearance Category (decimeters)	I	4	1	501	0	-MAXINT
PHT	Predominant Height (meters)	I	4	1	150	0	-MAXINT
RRA	Railroad Power Source	I	4	1	4	0	-MAXINT
RRC	Railroad/Road Categories	I	4	1	5	0	-MAXINT
RSA	Rail Spur/Siding Attribute	I	4	1	3	0	-MAXINT
RST	Road/Runway Surface Type	I	4	1	2	0	-MAXINT
SDC	Soil Depth Category	I	4	1	2	0	-MAXINT
SDS	Stem Diameter Size (centimeters)	I	4	1	900	0	-MAXINT
SGC	Gradient/Slope (percent)	I	4	0	998	999	-MAXINT
SRD	Surface Roughness Description	I	4	1	95	0	-MAXINT
STP	Soil Type	I	4	1	999	0	-MAXINT
SWC	Soil Wetness Condition	I	4	1	999	0	-MAXINT
TID	Tidal/Non-Tidal Category	I	4	1	2	0	-MAXINT
TSC	Tree Spacing Category (decimeters)	I	4	1	500	0	-MAXINT

TABLE 94. FACC attributes, VPF format, range, unknown and null values for TADS. - Continued

FACC Attribute	Attribute Name (unit of measure)	VPF Field Type	Field Size in Bytes	Range Min	Range Max	Unknown	Null
TUC	Transportation Use Category	I	4	1	4	0	-MAXINT
TXT	Text Attribute	T	*	*	*	UNK	0 length
UBC	Underbridge Clearance Category (decimeters)	I	4	1	998	0	-MAXINT
USE	Usage	I	4	1	139	0	-MAXINT
VEG	Vegetation Characteristics	I	4	1	56	0	-MAXINT
WDA	Water Depth Average (meters)	I	4	1	4	0	-MAXINT
WD1	Minimum Travelled Way Width (decimeters)	I	4	1	998	0	-MAXINT
WD3	Military Gap Width (decimeters)	I	4	1	50000	0	-MAXINT
WD5	Width Top (meters)	I	4	1	100	0	-MAXINT
WID	Width (meters)	I	4	1	300	0	-MAXINT
WTC	Weather Type Category	I	4	1	2	0	-MAXINT
WVA	Water Velocity Average	I	4	1	2	0	-MAXINT
YLN	Length of Greater Precision (decimeters)	I	4	1	99998	0	-MAXINT

NOTE:

1. Asterisk (*) indicates variable length text field.

INDEX

	PARAGRAPH	PAGE
Abbreviations and acronyms	6.4.3	39
Accuracy	3.2	4
Acquisition requirements	6.2	38
Actual definitions	6.4.4	42
Analysis limitation	6.1.2	38
Appendix A, Terrain Anlysis Data Set (TADS) data dictionary	A	44
Applicable documents	2	2
Applicable documents	A.2	44
Area feature class	3.14.5.1.8	27
Bin array record	3.12.3.1.2	13
Bin data record	3.12.3.1.3	13
Bounding rectangle tables	3.14.6.6	33
Cardboard sleeve mailer	3.16.4	36
CD labeling	3.16.1	34
CD-ROM labeling and packaging	3.16	34
Changes from previous issue	6.7	43
Classification	1.3	1
Classification and special handling of thematic files	6.8	43
Classification of inspections	4.1	36
Column format	3.12.2.2	9
Concluding material		158
Conformance inspection	4.3	37
Connected node primitive table	3.14.6.2	30
Continuity	3.5	5
Coordinate system	3.9	7
Coverage attribute (description) table	A.5.2.1	48
Coverage metadata	3.14.4.1	20
Coverage topology	3.14.4.3	24
Coverage-level coverages	3.14.4.2	24
Coverage-level directory files	3.14.4	20
Data dictionary content and consistency with ITD	A.6.1	53
Data dictionary organization	A.3.1	44
Data dictionary organization	A.6.2	53
Data format	3.10	7
(Data) library coverages	A.6.3	54
Data quality table	A.5.2.4	51
Data records	3.12.2.3	11
Data type	3.12.2.2.1	11
Database description	3.11	7
Database header table	A.4.2.2	46
Database metadata	3.14.1.1	17
Database-level directory files	3.14.1	17
Database-level metadata tables	A.4.2	45
Datum	3.3	5
Definitions	6.4	38
Description of attributes	A.7.2	147

INDEX - Continued

	PARAGRAPH	PAGE
Description of coverage	A.7.1	145
Directories	3.12.1	8
Distribution medium	3.11.2	7
DMA customer help desk	6.9	43
DoD specifications	A.2.1	44
DoD standards	A.2.2	44
Edge primitive table	3.14.6.3	31
Entity node primitive table	3.14.6.1	30
Examination	4.3.1	37
FACC feature and attribute codes for TADS libraries	A.7	145
Face primitive table	3.14.6.4	31
Feature class definition	3.14.5.1	25
Feature class metadata	3.14.5.1.1	25
Feature class schema table	3.14.4.1.1	22
Feature class structure level	3.14.5	25
Feature class types	3.14.5.1.2	25
Feature class/feature table names	3.14.5.1.3	25
Feature index	3.14.4.1.3	22
Feature index table	3.12.3.4	15
Feature join tables	3.14.4.1.4	24
Feature table structure and contents	3.14.5.2	27
Features and attributes of the data library	A.6	53
Federal information processing standards	A.2.3	44
File structure	3.11.1	7
First article	3.1	4
First article inspection	4.2	37
General	2.1	2
General usage	6.1.1	38
Geographic reference table	A.5.2.3	49
Government documents	2.2	2
Government furnished material	4.4	37
Government property surplus	4.5	37
Header	3.12.2.1	9
Header record	3.12.3.1.1	13
Horizontal accuracy	3.2.1	4
Horizontal datum	3.3.1	5
Index		150
Index data	3.12.3.2.3	13
Index directory	3.12.3.2.2	13
Indices	3.12.3	12
Information booklet	3.16.2	35
Information booklet text	3.16.2.2	35
Information booklet VITD specific items	3.16.2.1	35
Intended use	6.1	38
Jewel case liner (back cover of case)	3.16.3	36
Key type	3.12.2.2.3	11
Library attribute (extent) table (LAT)	A.4.2.1	46

INDEX - Continued

	PARAGRAPH	PAGE
Library directories	3.13.2	17
Library header table	A.5.2.2	49
Library metadata	3.14.3	18
Library-level directory files	3.14.2	18
Library-level metadata tables	A.5.2	48
Line feature class	3.14.5.1.7	27
Lineage narrative table	A.5.2.5	53
List of figures		155
List of tables		155
Marking	5.2	37
Naming conventions	3.15	33
Node feature class	3.14.5.1.6	26
Non-Government publications	2.3	4
Notes	6	38
Notes regarding table format	A.3.2	45
Null value condition	3.8.3	7
Number of elements	3.12.2.2.2	11
Number of feature classes	3.14.5.1.4	26
Obstacles area attribute definitions	A.6.3.1.1	56
Obstacles coverage	A.6.3.1	54
Obstacles coverage glossary	A.6.3.1.4	60
Obstacles line attribute definitions	A.6.3.1.2	57
Obstacles node attribute definitions	A.6.3.1.3	58
Order of precedence	2.4	4
Other government documents	A.2.4	44
Other government documents, drawings, and publications	2.2.2	3
Packaging	5	37
Packaging	5.1	37
Point feature class	3.14.5.1.5	26
Primitive tables and associated files	3.14.6	29
PTADB	6.4.2	38
Purpose	1.2	1
Relative accuracy	3.2.3	5
Requirements	3	4
Ring table	3.14.6.5	33
Scope	1	1
Scope	1.1	1
Scope	A.1	44
Scope	A.1.1	44
Security	3.4	5
Security classification	3.4.1	5
Security classification of product	3.4.2	5
Security classification of specification	3.4.3	5
Slope area attribute definitions	A.6.3.2.1	62
Slope water area attribute definitions	A.6.3.2.2	63
Slope/surface configuration coverage	A.6.3.2	61
Slope/surface configuration coverage glossary	A.6.3.2.3	65

INDEX - Continued

	PARAGRAPH	PAGE
Soil area attribute definitions	A.6.3.3.1	66
Soil open water and developed area attribute definitions	A.6.3.3.2	72
Soil/surface materials coverage	A.6.3.3	65
Soil/surface materials coverage glossary	A.6.3.3.3	73
Spatial index file	3.12.3.1	12
Specific VITD labeling items	3.16.1.1	34
Specifications, standards, and handbooks	2.2.1	2
Standardization agreements	6.6	43
Structure-level directories	3.13.1	16
Subject terms (keywords) listing	6.5	42
Supersession	6.3	38
Surface drainage area attribute definitions	A.6.3.4.2	82
Surface drainage channel area attribute definitions	A.6.3.4.1	78
Surface drainage channel line attribute definitions	A.6.3.4.3	83
Surface drainage coverage	A.6.3.4	76
Surface drainage coverage glossary	A.6.3.4.7	95
Surface drainage line attribute definitions	A.6.3.4.4	88
Surface drainage node attribute definitions	A.6.3.4.5	90
Surface drainage point attribute definitions	A.6.3.4.6	92
Table 33 parameters	A.5.2.3.1	50
TADS data dictionary organization	A.3	44
TADS data library	A.5	48
TADS data library structure and content	A.5.1	48
TADS database-level VPF tables and contents	A.4	45
TADS directory organization	3.13	16
TADS tree structure	A.6.4	143
TADS VPF table structure and content	A.4.1	45
Tests	4.3.2	37
Thematic file index	3.12.3.2	13
Thematic index header	3.12.3.2.1	13
Thematic layer organization	3.6	5
Transportation area attribute definitions	A.6.3.5.1	106
Transportation bridge line attribute definitions	A.6.3.5.2	109
Transportation bridge node attribute definitions	A.6.3.5.6	118
Transportation coverage	A.6.3.5	104
Transportation coverage glossary	A.6.3.5.8	124
Transportation line attribute definitions	A.6.3.5.4	113
Transportation node attribute definitions	A.6.3.5.7	121
Transportation railroad line attribute definitions	A.6.3.5.5	116
Transportation road line attribute definitions	A.6.3.5.3	111
TTADB	6.4.1	38
Units of measure	3.7	5

INDEX - Continued

	PARAGRAPH	PAGE
Unknown value condition	3.8.2	6
Unknown, not applicable, and null values	3.8.1	6
Value description table	3.14.4.1.2	22
Variable-length index file	3.12.3.3	15
Vegetation area attribute definitions	A.6.3.6.1	134
Vegetation coverage	A.6.3.6	133
Vegetation coverage glossary	A.6.3.6.4	140
Vegetation forested area attribute definitions	A.6.3.6.2	136
Vegetation water area attribute definitions	A.6.3.6.3	138
Verification	4	36
Vertical accuracy	3.2.2	4
Vertical datum	3.3.2	5
VITD/TADS feature and attribute coding scheme	3.8	5
Volume identifier	3.16.1.2	35
VPF structure levels, tables, and files	3.14	17
VPF table and file structure	3.12	8
VPF tables	3.12.2	8

LIST OF FIGURES

FIGURE		PAGE
1.	Illustration of a VPF table	8
2.	VPF structure levels and TADS implementation	16
3.	TADS database structure-level tables and files	18
4.	TADS library structure level	19
5.	Coverage level roadmap	21

LIST OF TABLES

TABLE		PAGE
1.	Thematic layers for CCXXXXXX library	6
2.	Schema for VPF header structure	10
3.	Data types permitted in the TADS database	11
4.	Key types permitted in the TADS database	11
5.	Format for a spatial index (*SI) file	12
6.	Format for thematic index (*.*TI) file	14
7.	Format for variable-length index (*.**X or **X) file	15
8.	TADS database-level table and file names and description	17
9.	TADS library level directories, tables, indices and, description	19
10.	Coverage directories and descriptions for CCXXXXXX coverages	20
11.	TADS coverage-level metadata tables and description	22
12.	Feature class attribute table (FCA) definition	23
13.	Format and example of content for feature index table (END.FIT) for an entity node	23
14.	Example of line join table	24
15.	Feature table suffixes	25
16.	TADS coverage-level coverages and feature classes	26
17.	Format and example of content for a point feature table (SDRPOINT.PFT)	27
18.	Format and example of content for a node feature table (TRNNODE.PFT)	28
19.	Format and example content for a line feature table (TRRLINE.LFT)	28
20.	Format and example content for an area feature table (SDRAREA.AFT)	29
21.	Primitive table and associated files	29
22.	Format and example of content for entity node primitive table (END)	30
23.	Format and example of content for connected node primitive table (CND)	31
24.	Format and example of content for edge (EDG) primitive table	32

LIST OF TABLES - Continued

TABLE PAGE

25. Format and example of content for face (FAC) primitive table 32
26. Format and example of content for ring (RNG) table .. 33
27. Format and example of content for bounding rectangle tables (FBR or EBR) 34
28. Naming conventions for TADS tables and files 34
29. Format and content for library attribute extent table 46
30. Format and content for database header table (DHT) .. 47
31. Format and sample content for coverage attribute (description) table (CAT) 48
32. Format and content for example TADS library header table (LHT) 49
33. Format and sample content for a TADS geographic reference table (GRT) 50
34. Format and content for example data quality table (DQT) 51
35. Format and content of the lineage documentation table (LINEAGE.DOC) 53
36. CCXXXXXXX1 library feature and primitive tables by coverage..... 54
37. Obstacles feature class schema table (FCS) 55
38. Obstacles area feature table 55
39. Obstacles line feature table 56
40. Obstacles line join table 56
41. Obstacles node feature table 58
42. Obstacles feature class attribute table 59
43. Obstacles character value description table 59
44. Obstacles integer value description table 61
45. Slope/surface configuration feature class schema table (FCS) 62
46. Slope/surface configuration area feature table 62
47. Slope/surface configuration water and miscellaneous area feature table 63
48. Slope feature class attribute table 64
49. Slope/surface configuration character value description table 64
50. Slope/surface configuration integer value description table 65
51. Soil/surface materials feature class schema table (FCS)..... 66
52. Soil/surface materials area feature table 66
53. Soil open water and developed area feature table 71
54. Soil surface materials feature class attribute table 72
55. Soil/surface materials character value description . table 73
56. Soil/surface material integer value description table 74

LIST OF TABLES - Continued

TABLE		PAGE
57.	Surface drainage feature class schema table (FCS) ...	77
58.	Surface drainage channel area feature table	78
59.	Surface drainage area feature table	82
60.	Surface drainage channel line feature table	83
61.	Channel line join table	83
62.	Surface drainage line feature table	87
63.	Surface drainage line join table	88
64.	Surface drainage node feature table	90
65.	Surface drainage point feature table	92
66.	Surface drainage feature class attribute table	93
67.	Surface drainage character value description table ..	94
68.	Surface drainage integer value description table	101
69.	Transportation feature class schema table (FCS)	105
70.	Transportation area feature table	106
71.	Transportation area join table	106
72.	Transportation bridge line feature table	108
73.	Bridge line join table	108
74.	Transportation road line feature table	110
75.	Road line join table	111
76.	Transportation line feature table	112
77.	Transportation line join table	112
78.	Transportation railroad line feature table	115
79.	Railroad line join table	115
80.	Transportation bridge node table	117
81.	Transportation node feature table	120
82.	Transportation feature class attribute table	122
83.	Transportation character value description table	123
84.	Transportation integer value description table	130
85.	Vegetation feature class schema table (FCS)	134
86.	Vegetation area feature table	131
87.	Vegetation forested area feature table	135
88.	Vegetation water area feature table	138
89.	Vegetation feature class attribute table	139
90.	Vegetation character value description table	140
91.	Vegetation integer value description table	142
92.	TADS tree structure	143
93.	TADS FACC codes by coverage and feature type	145
94.	FACC attributes, VPF format, range, unknown and null values for TADS	147

CONCLUDING MATERIAL

Custodian:
DMA - MP
Air Force - 09
Army - TI
Navy - NO

Review activities:
Marine Corps - MC

Preparing activity:
DMA - MP

(Project MCGT-0176)

STANDARDIZATION DOCUMENT IMPROVEMENT PROPOSAL

INSTRUCTIONS

1. The preparing activity must complete blocks 1, 2, 3, and 8. In block 1, both the document number and revision letter should be given.
2. The submitter of this form must complete blocks 4, 5, 6, and 7.
3. The preparing activity must provide a reply within 30 days from receipt of the form.

NOTE: This form may not be used to request copies of documents, nor to request waivers, or clarification of requirements on current contracts. Comments submitted on this form do not constitute or imply authorization to waive any portion of the referenced document(s) or to amend contractual requirements.

I RECOMMEND A CHANGE:	1. DOCUMENT NUMBER MIL-PRF-89040A	2. DOCUMENT DATE *(YYMMDD)* 960508

3. DOCUMENT TITLE PERFORMANCE SPECIFICATION VECTOR PRODUCT INTERIM TERRAIN DATA (VITD)

4. NATURE OF CHANGE *(Identify paragraph number and include proposed rewrite, if possible. Attach extra sheets as needed)*

5. REASON FOR RECOMMENDATION

6. SUBMITTER

a. NAME *(Last, First, Middle Initial)*	b. ORGANIZATION	
c. ADDRESS *(Include Zip Code)*	d. TELEPHONE *(Include Area Code)* (1) Commercial (2) AUTOVON *(if applicable)*	7. DATE SUBMITTED *(YYMMDD)*

8. PREPARING ACTIVITY

a. NAME DEFENSE MAPPING AGENCY	b. TELEPHONE *(Include Area Code)* (1) Commercial (703) 275-8509	(2) AUTOVON 235-8509
c. ADDRESS *(Include Zip Code)* ATTN: ATIS 8613 Lee Highway Fairfax, VA 22031-2137	IF YOU DO NOT RECEIVE A REPLY WITHIN 45 DAYS, CONTACT: Defense Quality and Standardization Office 5203 Leesburg Pike, Suite 1403, Falls Church, VA. 22041-3466 Telephone (703) 756-2340 AUTOVON 289-2340	